Mixing Console Broadcast 16

Bedienungs- und Serviceanleitung
Operation and Service Instructions

REVOX®

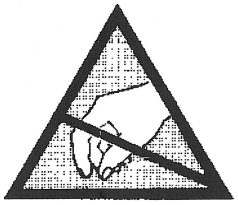

Behandlung von MOS-Bauteilen

MOS-Bausteine sind besonders empfindlich auf elektrostatische Ladungen. Folgendes ist daher zu beachten:

- Elektrostatisch empfindliche Bauteile werden in Schutzverpakungen gelagert und transportiert.
- Jeder Kontakt der Elementanschlüsse mit elektrostatisch aufladbaren Materialen ist unbedingt zu vermeiden.
- Anschlüsse dürfen nur berührt werden, wenn das Handgelenk geerdet ist.
- Als Arbeitsunterlage ist eine geerdete, leitende Matte zu verwenden.
- Printkarten nicht unter Spannung herausziehen oder einstecken.

Handling MOS components

MOS components are extremely sensitive to static charges. Please observe therefore the following regulations:

- Components sensitive to static charges are stored and shipped in protective packaging. On the package you will find the symbol shown above.
- Avoid any contact of connector pins with foam packages and foil made of similar chargeable package material.
- Don't touch the connector pins if your wrist is not grounded with a conducting wristlet.
- Use a grounded conducting mat when working with sensitive components.
- Never plug or unplug PCB's containing sensitive components when the set is switched on.

MIXING CONSOLE BROADCAST REVOX MB16 *Order No. 15003*

Operating and service instructions

Deutsch

1. Allgemeine Hinweise
2. Bedienungselemente, Funktionen, Anschlüsse
3. Spezifikationen
4. Abgleich

English

1. General information
2. Operating elements, functions, connectors
3. Specifications
4. Alignments

5. Schematic diagrams, pcbs, parts

Inhalt

1. Allgemeine Hinweise D3

2. Bedienungselemente, Funktionen, Anschlüsse D4
(nach Baugruppen geordnet)

2.1 INPUT UNIT MIC D5
2.2 INPUT UNIT LINE D7
2.3 INPUT UNIT TELEPHONE D8
2.4 MASTER UNIT D10
2.5 CONTROL ROOM UNIT D11
2.6 STUDIO UNIT D13
2.7 METER PANEL D15
2.8 POWER SUPPLY UNIT D17
2.9 INTERFACES D17

3. Spezifikationen D18

3.1 Baugruppen D18
3.2 Allgemeines zur MB16 Konstruktion D19
3.3 Ausbaubarkeit und Optionen D19
3.4 Technische Daten D20
3.5 Abmessungen D21

4. Abgleich D22

4.1 Vorbereitungen D22
4.2 Messgeräte D22
4.3 Allgemeines zum Abgleich D23
4.4 Entmagnetisieren der Mikrofon-Eingangsübertrager D23
4.5 Summen-Einheit ..... 1.775.860 ..... D25
4.5.1 Spannungseinstellung Flachbahnregler D25
4.5.2 Summenklirrfaktor D25
4.6 Eingangseinheiten ..... 1.775.800...1.775.840 ..... D25
4.6.1 Eingangspegel ..... LINE INPUT ..... 1.775.800 / 1.775.810 ..... D25
4.6.2 Eingangsklirr ..... LINE INPUT ..... 1.775.800 / 1.775.810 ..... D25
4.6.3 Eingangspegel ..... TELEPHONE ..... 1.775.820 ..... D26
4.6.4 Eingangsklirr ..... TELEPHONE ..... 1.775.820 ..... D26
4.6.5 Eingangspegel ..... MIC INPUT ..... 1.775.830 / 1.775.840 ..... D26
4.6.6 Eingangsklirr ..... MIC INPUT ..... 1.775.830 / 1.775.840 ..... D26

4.7 Anzeige-Einheit D27
4.8 Aussteuerungsanzeige Master D27
4.9 Aussteuerungsanzeige Monitor D27

5. Schematic diagrams, pcbs, parts

1. Allgemeine Hinweise

Um Ihnen die Lokalisierung von Bedienungselementen und Anschlüssen zu erleichtern, enthält diese Anleitung eine ausklappbare Seite mit Übersichtszeichnungen des MB16.

Dort sind die Einheiten mit dem jeweiligen Kapitel bezeichnet, unter dem Sie dann eine detaillierte Beschreibung mit Grafik der entsprechenden Einheit finden.

Ein Blockschaltbild sowie Schema, Bestückungspläne und -listen finden Sie im Kapitel 5. Schema.

2. Bedienungselemente, Funktionen, Anschlüsse

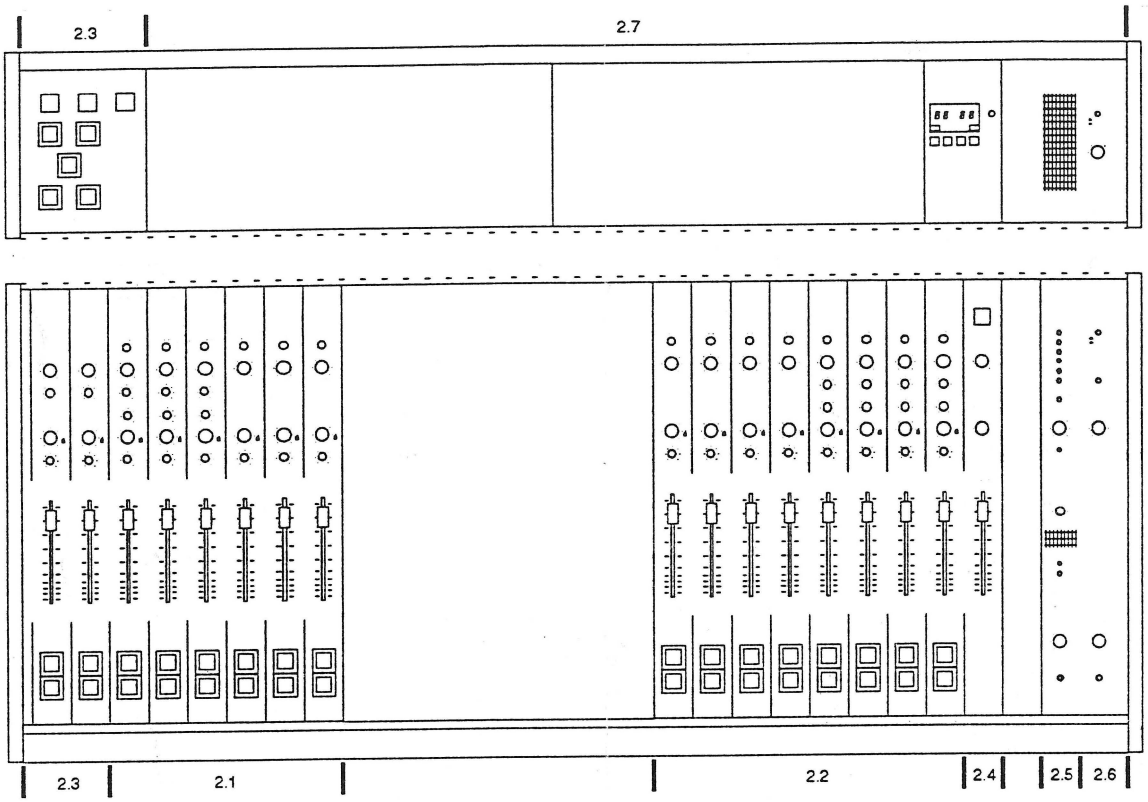

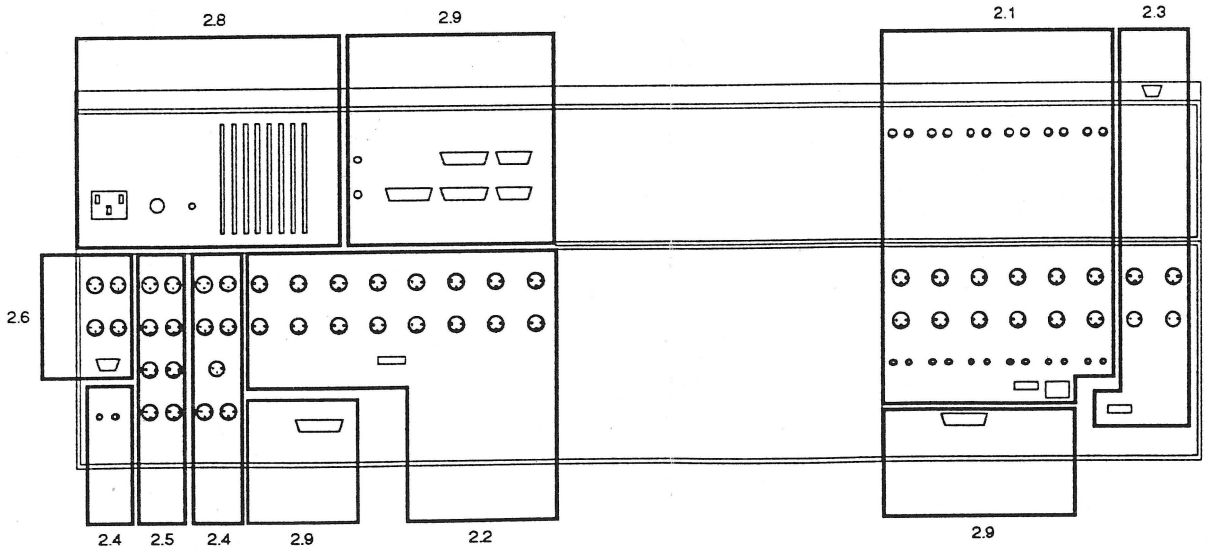

2.1 INPUT UNIT MIC

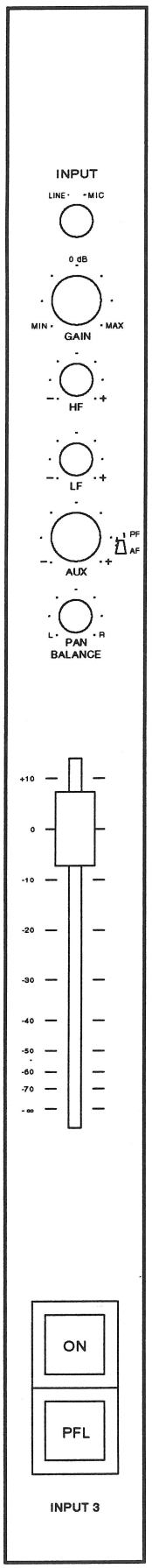

Bedienungselemente

INPUT SELECTOR Eingangswahlschalter für die folgenden Eingänge:

LINE: Hochpegeleingang
Die Umschaltung zwischen MONO BAL (symmetrisch) und STEREO UNBAL (asymmetrisch) erfolgt intern durch die Jumpers JP1 auf den INPUT UNITs MIC 1.775.830/.840.

MIC: Symmetrischer, erdfreier Mikrofoneingang.
Das Trittschallfilter (Bass cut) kann intern durch die Jumper JP2 auf den INPUT UNITs MIC 1.775.830/.840 aktiviert werden.

Vorsicht: Es dürfen nicht gleichzeitig Hochpegel-Signalquellen und Stereo-HiFi-Signalquellen angeschlossen sein!

GAIN Eingangspegelregler mit Rast bei 0 dB zur Anpassung des Pegels der verschiedenen Signalquellen. Die Eichmarke auf der Skala kennzeichnet 0 dB Verstärkung über den ganzen Kanal in Stellung LINE des Eingangswahlschalters und Stellung 0 dB der Fader INPUT und MASTER.

HF Höhenregler: ± 15 dB bei 20 kHz, in Mittelstellung Rast keine Beeinflussung des Frequenzganges.

LF Bassregler: ± 15 dB bei 20 Hz, in Mittelstellung Rast keine Beeinflussung des Frequenzganges.

AUX Pegelregler für AUX-Bus (Mono), umschaltbar mit Zugschalter,
gedrückt: After-Fader
gezogen: Pre-Fader.

PAN / BALANCE Panoramapotentiometer mit Mittelrast für MIC, LINE (Verteilung des Mono-Signals auf den linken und rechten Kanal). Balanceregler für Stereo-Signale.

FADER Kanalregler (Stereo) mit Bereich +10 dB...-70 dB.

ON Rote, rastende Leuchttaste.

Taste nicht gedrückt: Der Kanal wird stummgeschaltet, unabhängig von der Stellung des Faders (Lampe dunkel).

Taste gedrückt: Der Kanal ist abhängig von der Stellung des Faders. Falls der Fader am unteren Anschlag steht, ist der Kanal stumm; die Lampe leuchtet schwach. Durch das Aufziehen des Faders wird der Audiokanal aktiv; die Lampe leuchtet hell.
Die ON-Taste lässt sich durch Aufschneiden einer Drahtbrücke desaktivieren (PFL Unit 1.775.850, 2 x W1...W8).

PFL Grüne rastende Leuchttaste für Pre-Fader-Listening (Mono).

2.1 INPUT UNIT MIC

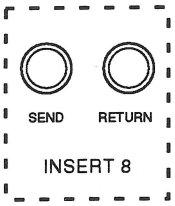

Anschlussfeld

INSERT MONO SEND / RETURN

Symmetrischer Ein-/ Ausgang (6,3 mm Jack) zum Einschlaufen eines Limiters.

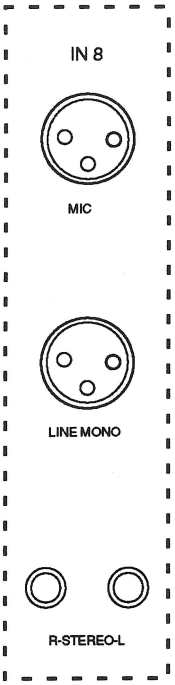

MIC

Symmetrisch erdfreier Mikrofoneingang (XLR-female)

LINE MONO

Symmetrischer Hochpegeleingang (XLR-female).

STEREO L / R

Asymmetrischer Hochpegeleingang für den Anschluss von Stereo-HiFi-Quellen (Cinch).

Dip switches

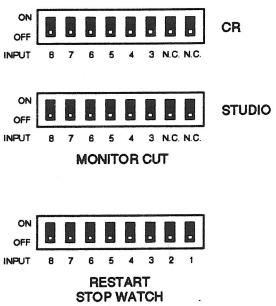

CR MONITOR CUT

Programmierung zur Stummschaltung der Monitor-Sammelschiene bei aufgezogenem Mikrofon-Fader. Wird die Drahtbrücke W1 (Speaker Unit 1.775.890) durchgetrennt, so ist der im MB16 eingebaute Lautsprecher immer aktiv, auch bei gesetztem CR monitor cut. **Achtung!** Rückkopplungsgefahr.

STUDIO MONITOR CUT

Programmierung zur Stummschaltung der Studio-Sammelschiene bei aufgezogenem Mikrofon-Fader.

RESTART STOP WATCH

Programmierung zum Starten der Stopuhr beim Aufziehen des Faders.

2.2 INPUT UNIT LINE

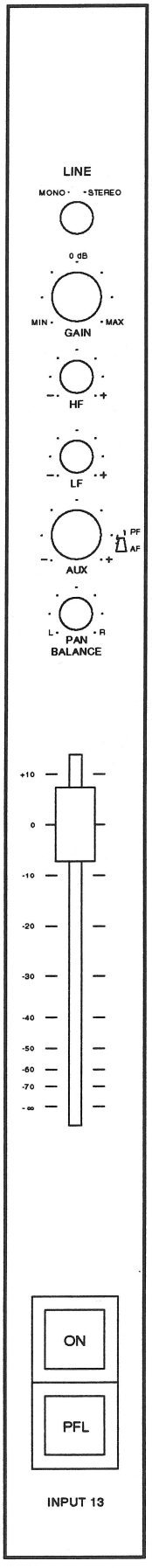

Bedienungselemente

MODE SELECTOR Mono / Stereo- Umschalter:
MONO: Stereosignale werden auf MONO umgeschaltet.
STEREO: Stereosignale werden links und rechts getrennt auf die beiden Kanäle geschaltet.

GAIN, HF, LF, AUX, PAN / BALANCE, FADER, ON, PFL Siehe 2.1 INPUT UNIT MIC.

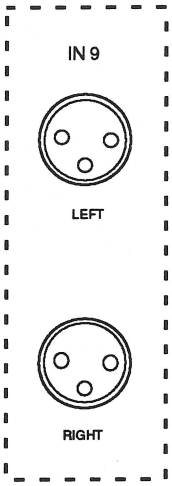

Anschlussfeld

LEFT Symmetrischer Hochpegeleingang für das linke Stereo-Signal (XLR-female).

RIGHT Symmetrischer Hochpegeleingang für das rechte Stereo-Signal (XLR-female).

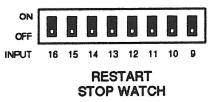

Dip switches

RESTART
STOP WATCH Siehe 2.1 Input Unit MIC.

2.3 INPUT UNIT TELEPHONE

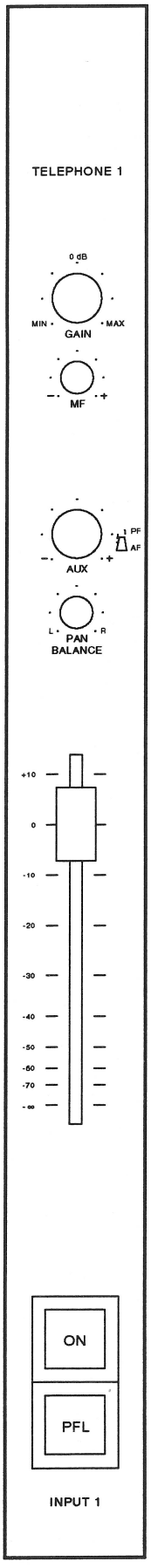

Bedienungselemente

GAIN, AUX, PAN / BALANCE, FADER, ON, PFL — Siehe 2.1 INPUT UNIT MIC.

MF — Mittenregler: ± 15 dB bei 2 kHz, in Mittelstellung Rast und keine Beeinflussung des Frequenzganges.

Bedienungselemente auf dem Meterpanel

CALL — Meldeleuchte (rot) für ankommendes Telefongespräch. Die Kontakte der Lampe (24V) sind auf den D-Stecker REMOTE TELEPHONE geführt. Die Ansteuerung erfolgt von extern.

CR MON CUT — Funktionsanzeige für den aufgezogenen Fader des DJ Mikrofones. Programmierung mit dem dip switch CR MONITOR CUT.

HOLD — Beleuchtete Rasttaste zur Anwahl des extern angeschlossenen Telefon-Hybriden über die Buchse REMOTE TELEPHONE. Die Linie des Anrufers wird gehalten. Gleichzeitig wird der N-1 Mix auf die Buchse TO TEL HYB (XLR male) geführt.

CONFERENCE — Beleuchtete Rasttaste zur Verbindung der beiden externen Anrufer. Mit TALK BACK 1 und 2 kann sich der DJ in die Konferenz einschalten.

TALK BACK — Beleuchtete Rasttaste zur Verbindung des DJ-Mikrofons mit dem Anrufer. Der DJ hört den Anrufer in den um 20 dB abgesenkten Monitorlautsprechern oder im Kopfhörer.

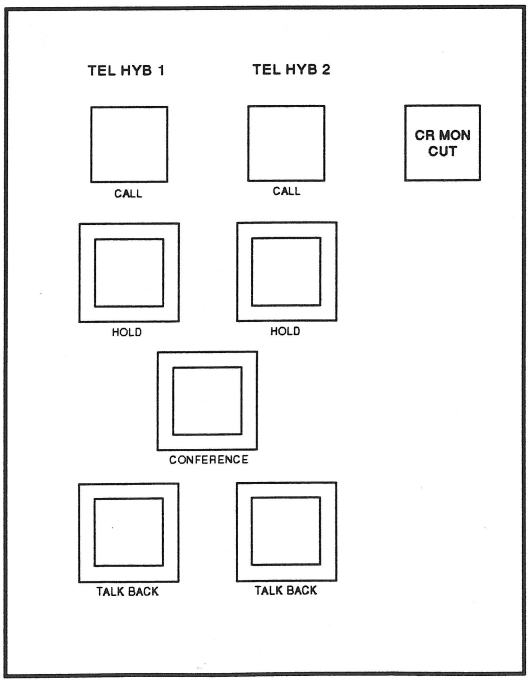

2.3 INPUT UNIT TELEPHONE

REMOTE TELEPHONE

Anschlussfeld

REMOTE TELEPHONE Fernsteuer-Kontakte für den Telefon-Hybrid 1 und 2 (9-pol D-Type, female).

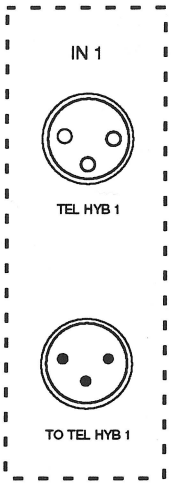

TEL HYB Symmetrischer Hochpegeleingang (XLR-female).

TO TEL HYB Symmetrischer Hochpegelausgang (XLR-male). Dem Summensignal (MASTER) wird der eigene Kanal subtrahiert und dem extern angeschlossenen Telefon-Hybrid zugeführt (N-1 Mix).

Dip switches

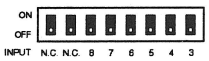

DJ MIC SELECTOR

DJ MIC SELECTOR Dip-Switch zum Anwählen des DJ-Mikrofons für die Verbindung des Disk Jockeys mit den Anrufern 1 und 2.

2.4 MASTER UNIT

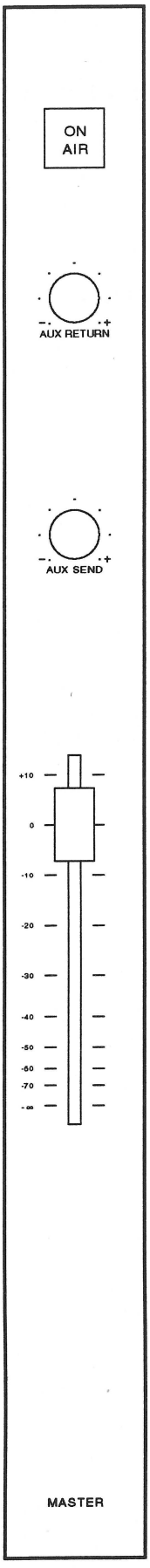

Bedienungselemente

ON AIR Beleuchtete, mit Klappe verriegelte Rasttaste (rot). Bei gedrückter Taste hat die Stellung des Faders keinen Einfluss auf das Ausgangssignal. Die Masterausgänge sind alle aktiv. Ist die Taste ausgelöst, wird der Ausgang TO TRANSMITTER (trafo) abgeschaltet; der Fader wirkt jetzt auf die Ausgänge TO LOGGING (trafoless) und den asymmetrischen Ausgang.

AUX RETURN Pegelregler des RETURN-Hilfseinganges (Stereo).

AUX SEND Pegelregler des Summensignals für AUX-Bus (Mono).

FADER Summenregler MASTER (Stereo) mit Bereich +10 dB...-70 dB. Wirkt nur bei nicht gedrückter ON AIR Taste.

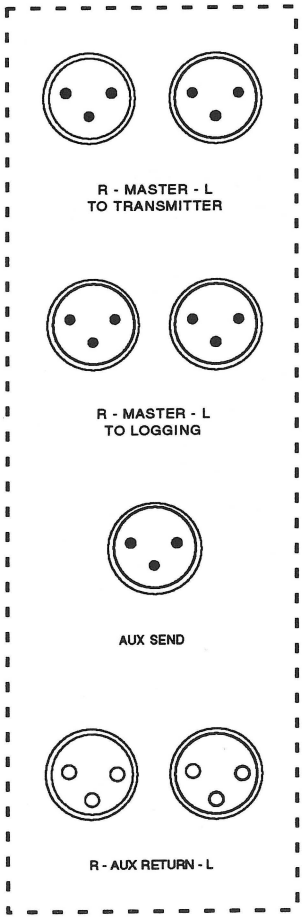

Anschlussfeld

MASTER TO TRANSMITTER L / R Symmetrisch erdfreier Ausgang des Summensignals (XLR-male).

MASTER TO LOGGING L / R Symmetrischer Ausgang des Summensignals (XLR-male). Die Pegel können mit den Jumpers JP1,2 auf dem Master Unit 1.775.860 gesetzt werden.

AUX SEND Symmetrischer Ausgang des AUS-Bus (XLR-male).

AUX RETURN L / R Symmetrische Hilfseingänge auf die linke und rechte Summen-Sammelschiene (XLR-female).

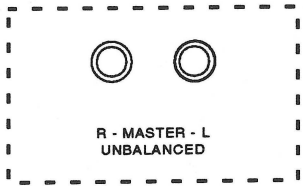

UNBALANCED L / R Asymmetrischer Ausgang des Summensignals (Phono-Plug).

2.5 CONTROL ROOM MONITOR UNIT

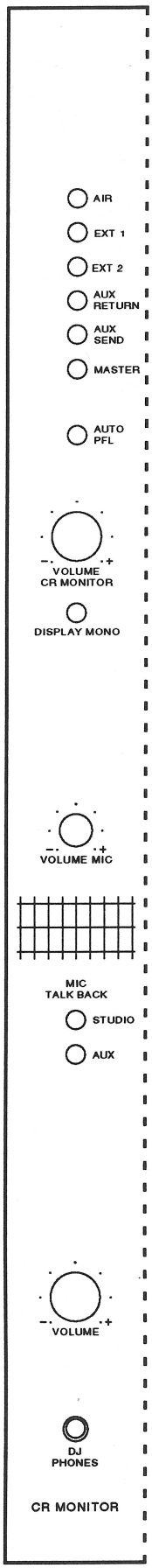

Bedienungselemente

AIR, EXT1, EXT2, AUX RETURN, AUX SEND, MASTER

Gegenseitig auslösende, rastende Drucktasten zur Durchschaltung des entsprechenden Signals auf die Monitor-Sammelschiene.

AUTO PFL

Drucktaste; bei gedrückter Taste wird die Monitor-Sammelschiene automatisch auf den PFL-Bus umgeschaltet, sobald die Leuchttaste PFL eines Eingangskanales gedrückt wird.

VOLUME CR MONITOR

Potentiometer zur Pegeleinstellung des linken und rechten Monitor-Ausganges.

DISPLAY MONO

Nicht rastende Drucktaste schaltet das Monitor-Display auf Mono zur Kontrolle der Mono-Kompatibilität eines Stereo-Signales.

MIC TALK BACK

VOLUME MIC

Empfindlichkeitsregler für das darunter eingebaute Mikrofon.

STUDIO

Aufsprechen auf die Studio-Sammelschiene.

AUX

Aufsprechen auf die Hilfs-Sammelschiene.

DJ PHONES

VOLUME

Lautstärkeeinstellung des Kopfhörers.

PHONES

Stereo-Klinkenbuchse zum Anschluss eines Kopfhörers.

2.5 CONTROL ROOM MONITOR UNIT

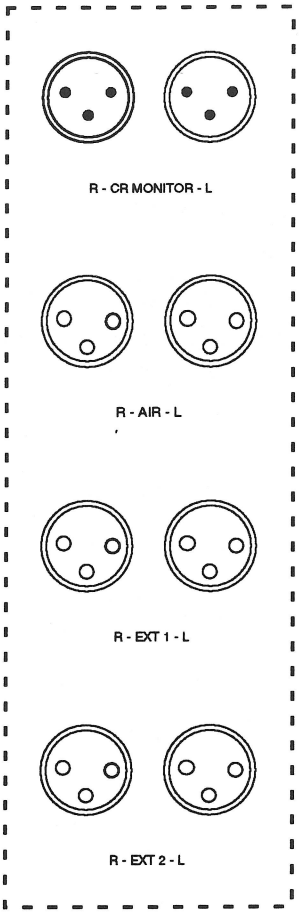

Anschlussfeld

CR MONITOR OUT L / R

Symmetrische Ausgänge der linken und rechten Abhör-Sammelschiene (XLR-male). Der Ausgangspegel ist mit dem Lautstärkeregler VOLUME CR MONITOR einstellbar.
Diese Ausgänge werden durch das mit den dip switches CR MONITOR CUT programmierte Signal stummgeschaltet.

AIR, EXT 1, EXT 2 L / R

Symmetrische, externe Eingänge auf die linke und rechte Monitor-Sammelschiene (XLR-female).

2.6 STUDIO UNIT

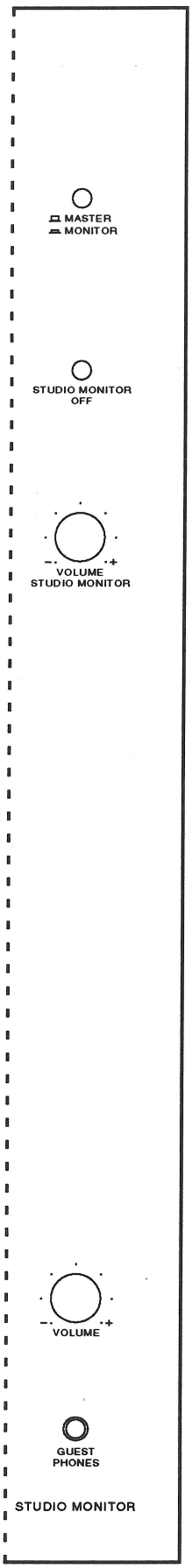

Bedienungselemente

MASTER / CR MONITOR Rastende Drucktaste; bei gelöster Taste wird der Master, bei gedrückter Taste der CR Monitor zur Studio-Sammelschiene geschaltet.

STUDIO MONITOR OFF LED, leuchtet, wenn durch aufgezogenen Mikrofon-Fader der Studio-Monitor abgeschaltet wird.

VOLUME STUDIO MONITOR Potentiometer zur Pegeleinstellung des linken und rechten Studio-Ausganges.

GUEST PHONES

VOLUME Lautstärkeeinstellung des Kopfhörers.

PHONES Stereo-Klinkenbuchse zum Anschluss eines Kopfhörers.

2.6 STUDIO UNIT

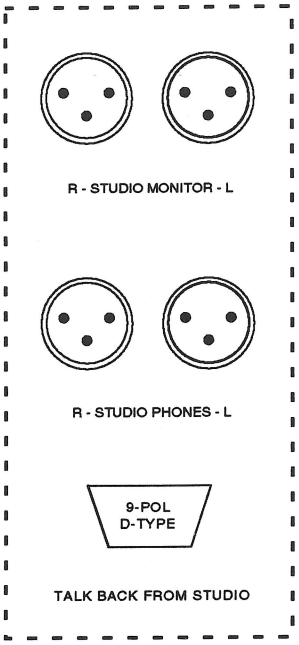

Anschlussfeld

STUDIO MONITOR L / R

Symmetrische Ausgänge der linken und rechten StudioSammelschiene (XLR-male). Der Ausgangspegel ist mit dem Lautstärkeregler VOLUME STUDIO MONITOR einstellbar.
Diese Ausgänge werden durch das mit den dip switches STUDIO MONITOR CUT programmierte Signal stummgeschaltet.

STUDIO PHONES L / R

Symmetrische Ausgänge der linken und rechten StudioSammelschiene (XLR-male). Diese Ausgänge werden nicht stummgeschaltet.

TALK BACK FROM STUDIO

Symmetrischer, externer Eingang vom Studio zum CR Monitor. Ein externer, erdfreier Kontakt (Talk Back Taste im Studio) schaltet das Talk Back Signal auf den rechten CR Monitor Kanal, falls der DJ MIC Fader geschlossen ist. Der linke CR Monitor Kanal erhält das um 20 dB abgesenkte CR Monitor Signal (9-pol D-Type, female).

2.7 METER PANEL

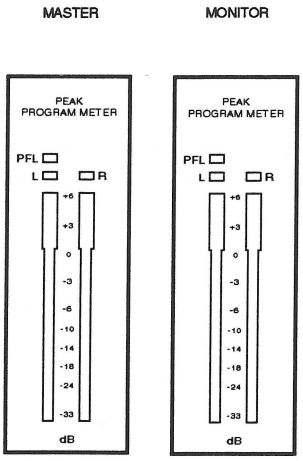

Bedienungs- und Anzeige-Elemente

PPM MASTER LED Peak Meter zur Anzeige des Master-Signales.

PPM MONITOR LED Peak Meter zur Anzeige des Monitor-Signales.

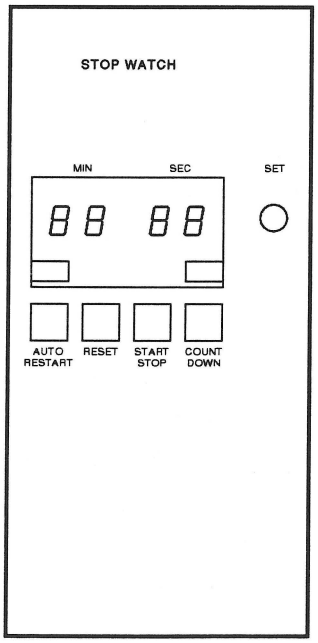

STOP WATCH

AUTO RESTART Drucktaste; bei Betätigung der Taste leuchtet die rote LED oberhalb der Taste auf, somit startet die Zeitmessung bei "00:00", sobald ein Fader aufgezogen wird.

RESET Drucktaste, zur Rückstellung der Uhr auf "00:00".

START STOP Drucktaste zur Zeitnahme mit ELAPSED-TIME. Gestartet wird mit dem ersten Tastendruck, mit dem zweiten erscheint die Zwischenzeit, und mit dem dritten wird die laufende Uhr wieder angezeigt.

COUNT DOWN Drucktaste; bei Betätigung der Taste leuchtet die rote LED oberhalb der Taste auf, mittels SET Potentiometer wird die Count Down Zeit eingestellt und durch ein weiteres betätigen der Taste gestartet.

SET Potentiometer zur einstellung der COUNT DOWN Zeit.

2.7 METER PANEL

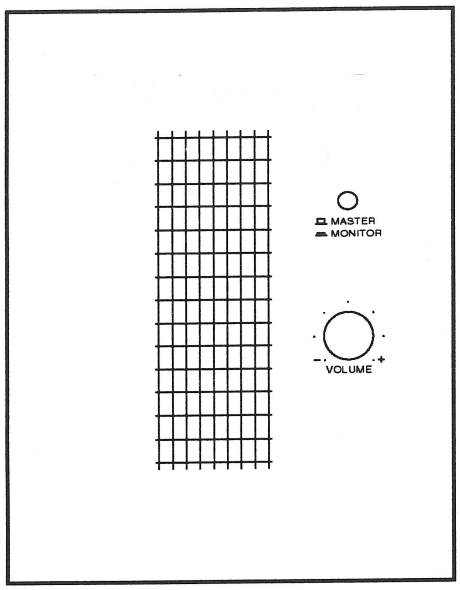

MONITOR SPEAKER

Bedienungselemente

MONITOR SPEAKER Eingebauter Lautsprecher zum Abhören der Monitor- oder Master-Sammelschiene.

MASTER / CR MONITOR Rastende Drucktaste; bei gelöster Taste wird der Master, bei gedrückter Taste der CR Monitor zum Monitor Speaker geschaltet.

VOLUME Potentiometer zur Lautstärkeeinstellung des Monitor-Lautsprechers.

2.8 POWER SUPPLY UNIT

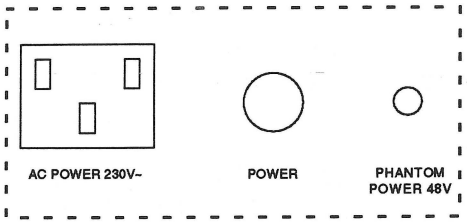

Bedienungselemente auf dem Anschlussfeld

POWER ON / OFF Netzschalter.

AC POWER 230 V~ Netzstecker dreipolig.

PHANTOM POWER 48 V ON / OFF Rastende Drucktaste zur Aktivierung der Phantomspeisung aller Mikrofoneingänge für Kondensator-Mikrofone.

2.9 INTERFACES

Anschlussfeld

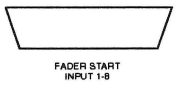

FADER START INPUT 1-8

Faderstart-Kontakte (Umschalter) der Eingangs-Einheiten 1..8 (25-pol D-Type, female).

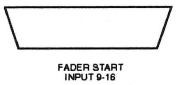

FADER START INPUT 9-16

Faderstart-Kontakte (Umschalter) der Eingangs-Einheiten 9..16 (25-pol D-Type, female).

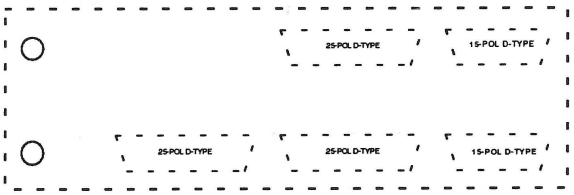

VCA CONTROL INPUT 1-8
(Option)

Verstärkungssteuerung der Eingangs-Einheiten 1..8.
Steuerspannung:
0 V: Regler ganz geöffnet
v = 0 dB,
5 V: Regler ganz geschlossen
v = -100 dB
(15-pol D-Type, male).

VCA CONTROL INPUT 9-16
(Option)

Verstärkungssteuerung der Eingangs-Einheiten 9..16.
Es gelten dieselben Steuerspannungen wie für INPUT 1..8.

Zusätzlich sind zwei Bohrungen für das Anbringen von Kopfhörerbuchsen vorhanden. Weitere Buchsen für Spezialanwendungen (z.B. 25-pol Buchsen) finden ebenfalls Platz.

3. Spezifikationen

3.1 Baugruppen

Das Mischpult gliedert sich elektrisch in folgende Funktionsgruppen:

Eingangseinheiten

- Telefon mit Präsenzregler
- Line-Mikrofon mit Bass- und Höhensteller
- Line-Mikrofon ohne Bass- und Höhensteller
- Auf den Line-Mic Einheiten sind folgende Funktionen mit Jumper programmierbar:
- Bass cut für Mikrofon
- Desaktivierung INSERT MONO
- Stereo unbalanced für Line
- Line mit Bass- und Höhensteller
- Line ohne Bass- und Höhensteller

Ausgangseinheiten

XLR Belegung:

1	=	Schirm
2	=	a-Ader
3	=	b-Ader

Master:
- Ausgangsspannung mit Jumper umsteckbar:

BALANCED:	+6 dBu	=	1,55 Veff
	+10 dBu	=	2,45 Veff
	+14 dBu	=	3,88 Veff
UNBALANCED:	0 dBu	=	0,775 Veff
	+4 dBu	=	1,23 Veff
	+8 dBu	=	1,95 Veff

- Ausgänge mit Jumper JP1 auf dem MASTER UNIT PCB 1.775.860 auf Mono steckbar.
- CR Monitor
- Studio Monitor

Anschlusseinheiten

Connection Unit Mic
- enthält die Anschlüsse für die beiden Telefoneinheiten und die 6 Line-Mic Einheiten.

Connection Unit Line
- enthält die Anschlüsse für 8 Line-Einheiten.

Connection Unit Master
- enthält die Anschlüsse für die Master- CR Monitor- und Studio Monitor Einheit.

PFL Unit
- PFL und ON Tasten sind für jeweils 8 Kanäle auf einer Printbaugruppe zusammengefasst.

Talk Back Unit
- Diese Baugruppe enthält die Tasten für die Talk Back Funktion mit den beiden Telefoneinheiten.

Speaker Unit
- Kleinlautsprecher mit Volumesteller zum Abhöhren der Master- oder CR-Monitorsammelschiene.

Meter Unit
- Für den Master wir dasselbe Instrument wie für den Monitor eingesetzt:
  PEAK-METER mit 2 LED-Ketten zu 24 Segmenten 18 Stufen grün, 6 Stufen rot. Die Helligkeit sowie die Pegel für beide Kanäle sind mit einem Schraubenzieher von der Frontplatte aus einstellbar. Das Monitor Meter enthält ein Leuchtfeld zur Funktionsanzeige PFL, AUX SEND (nur mono).

Netzteil
- Die Stromversorgung ist im Instrumentenaufsatz rechts eingebaut und besteht aus einem 200 VA Ringkerntransformator und dem Power Supply. Die Netzspannung ist intern umsteckbar für die Bereiche 115 V ± 10% und 230 V ± 10%.

  Stabilisierte Sekundärspannungen:

+15 V / 1 A	doppelt vorhanden für Audio
-15 V / 1 A	doppelt vorhanden für Audio
+6 V / 1 A	doppelt vorhanden für Logik und Lampen
+48 V	für Phantomspeisung.

3.2 Allgemeines zur MB16 Konstruktion

Die tragende Struktur des Mischpultes besteht aus einer Stahlblechwanne. Die Frontplatte fasst jeweils mehrere Eingangseinheiten zusammen. Jede Frontplatte ist mittels Einsteckleiste nach oben klappbar. Die Eingangseinheiten werden über Schweissbolzen auf der Frontplatte befestigt.
Der Instrumentenaufsatz enthält die entsprechenden Baugruppen auf im 40,64 mm Raster unterteilten Frontplatten. Ein nicht zum Lieferumfang gehörender 19" Baugruppenträger kann eingebaut werden. Dieser kann Europakarten aufnehmen.
Die Rückwand ist ebenfalls in Platten analog der Frontplatten unterteilt. Diese Platten tragen direkt die Prints mit den XLR-Buchsen.
Die Verkabelung erfolgt weitgehend mit Flachkabeln und dem MICRO MATCH Steckersystem von AMP.
Die Seitenteile sowie das Frontpolster werden von innen am Gehäuse befestigt.

3.3 Ausbaubarkeit und Optionen

- Die Ablagefläche zwischen Input 8 und 9 kann durch 8 Line Eingangseinheiten ersetzt werden. Das Netzteil ist entsprechend ausgelegt.

- Für je einen weiteren Anschluss von DJ PHONES bzw. GUEST PHONES ist vorgesorgt. An der MB16 Rückwand sowie am Boden wurden je zwei Bohrungen für Kopfhörerbuchsen angebracht. Die Pins für die Kopfhörersignale befinden sich auf folgenden PCBs:

DJ PHONES:	1.775.870	P1...P3
GUEST PHONES:	1.775.880	P1...P3

- VCA Unit, Einzelbaugruppe für jeden Eingangskanal aus dem A779 abgeleitet.

- Rack Kit, 19" Baugruppenträger.
- Seitenteile, für versenkten Einbau.

- Connector Kit, passender Stecker zu jedem Anschluss.

- Spezielle Seitenteile 1.775.510.18 für den Einbau des MB16 in einen Tisch. Abmessungen siehe unter Kap. 5 Schema.

Spare parts 1.775.510.40

Pos.	# Pieces	Part no.	Description	
1	2	1.775.370.32	Knob, Ø10 mm	dark grey
2	2	1.775.370.31	Knob, Ø15 mm	dark grey
3	2	42.01.0252	Cap, Ø10 mm	black
4	2	42.01.0254	Cap, Ø10 mm	blue
5	2	42.01.0255	Cap, Ø10 mm	yellow
6	2	42.01.0257	Cap, Ø15 mm	light grey
7	2	42.01.0260	Cap, Ø15 mm	red
8	2	42.01.0261	Cap, Ø15 mm	blue
9	1	1.011.094.02	Push button + top	red
10	1	1.011.094.04	Push button + top	yellow
11	1	1.011.094.05	Push button + top	green
12	1	1.011.094.08	Push button + top	light grey
13	2	1.911.000.32	Fader knob	red
14	2	1.911.000.34	Fader knob	yellow
15	2	1.911.000.35	Fader knob	green
16	2	1.911.000.36	Fader knob	blue
17	2	1.911.000.39	Fader knob	white
18	3	51.01.0121	Power fuse 2.5 A	slow
19	1	54.42.1050	Mains connector	female
20	10	51.02.0154	Bi-pin lamp	T1

Connector Kit 1.775.510.41

Pos.	# Pieces	Part no.	Description
1	13	54.02.0281	XLR jack
2	38	54.02.0280	XLR plug
3	14	54.02.0601	Phone jack
4	7	REVOX 33042	Stereo cinch cable 2m
5	2	54.13.7020	Case to 9-pole D-type
6	2	54.02.0180	Plug 9-pole D-type
7	2	54.13.7022	Case to 25-pole D-type
8	2	54.02.0184	Plug 25-pole D-type

3.4 Technische Daten

Eingänge

Impedanz:

MIC: ..... > 1.2 kOhm
LINE, STEREO, AUX RETURN: ..... 47 kOhm

Regelbereich für 0 dB am Peak-Meter:

GAIN MIC: ..... -60...0 dBu
GAIN LINE: ..... -20...+16 dBu
AUX RETURN: ..... - 4...+22 dBu

Max. Eingangspegel (Ktot ≤ 1%):

MIC: ..... 0 dBu
LINE, AUX RETURN: ..... +26 dBu

Ausgänge

Impedanz:

MASTER, symmetrisch ..... < 50 Ohm
MASTER, asymmetrisch ..... < 1 kOhm
AUX SEND: ..... < 50 Ohm

Ausgangspegel bei 0 dB Anzeige am Peak-Meter:

AUX SEND ..... + 6 dBu
MASTER to TRANSMITTER ..... +6 / +10 / +14 dBu
(Trenntrafo)
MASTER to LOGGING ..... +6 / +10 / +14 dBu
(trafolos)
MASTER, asymm. ..... 0.775 / 1.25 / 2 V
mit Brückenstecker einstellbar
CR MONITOR, STUDIO MONITOR ..... max.+16 dBu
STUDIO PHONES ..... + 6 dBu

Max. Ausgangspegel:

MASTER, symmetrisch ..... +24 dBu
MASTER, asymmetrisch ..... 8 V

Frequenzgang

Linear (HF, LF in Mittenstellung) ..... 20 Hz...20 kHz ..... ± 1 dB
BASS CUT: 12 dB/Oktave ..... -3 dB-Punkt bei 70 Hz

HF (Treble): ..... Einsatzpunkt: ..... 1 kHz
..... Einstellbereich bei 20 kHz: ± 15 dB

LF (Bass): ..... Einsatzpunkt: ..... 1 kHz
..... Einstellbereich bei 20 Hz: ... ± 15 dB

Störspannungsabstände

alle Werte bewertet nach A-Kurve

1 x MIC: ..... > 63 dB
@ -60 dBu Eing. Spannung, Abschluss mit 200 Ohm

1 x LINE: ..... > 86 dB
@ 0 dBu Eing. Spannung, Abschluss mit 1 kOhm

MASTER Fader geschlossen: ..... > 100 dB

Klirrfaktor

MIC (-20 dBu Eingang): ..... < 0.03% ..... bei 1kHz
..... < 0.15% ..... 30 Hz...15 kHz

LINE (0 dBu Eingang +6 dBu Ausgang): < 0.03% ..... bei 1 kHz
..... < 0.15% ..... 20 Hz...20 kHz

Übersprechdämpfung

alle Messwerte bei 10 kHz

Kanaltrennung STEREO L / R ..... > 50 dB
Ausschaltdämpfung INPUT Fader ..... > 86 dB
MASTER Fader ..... > 100 dB

Anzeigen

Stereo Peak-Meter mit 24-segment Bargraph-Kette

Bereiche: ..... +6...+ 1 dB in 1 dB Schritten, rot
..... 0...- 6 dB in 1 dB Schritten, grün
..... -7...-18 dB in 2 dB Schritten, grün
..... 19...-33 dB in 3 dB Schritten, grün

Stromversorgung

Spannung umschaltbar über internen Brückenstecker

115 / 230 V AC, ... 50..60 Hz, max. 200 W
Abnehmbares Netzkabel, 3-polig mit Schutzerdung

Abmessungen

(B x H x T): ..... 1192 x 385 x 730 mm

Gewicht

..... 46 kg netto

Änderungen vorbehalten

3.5 Abmessungen (mm)

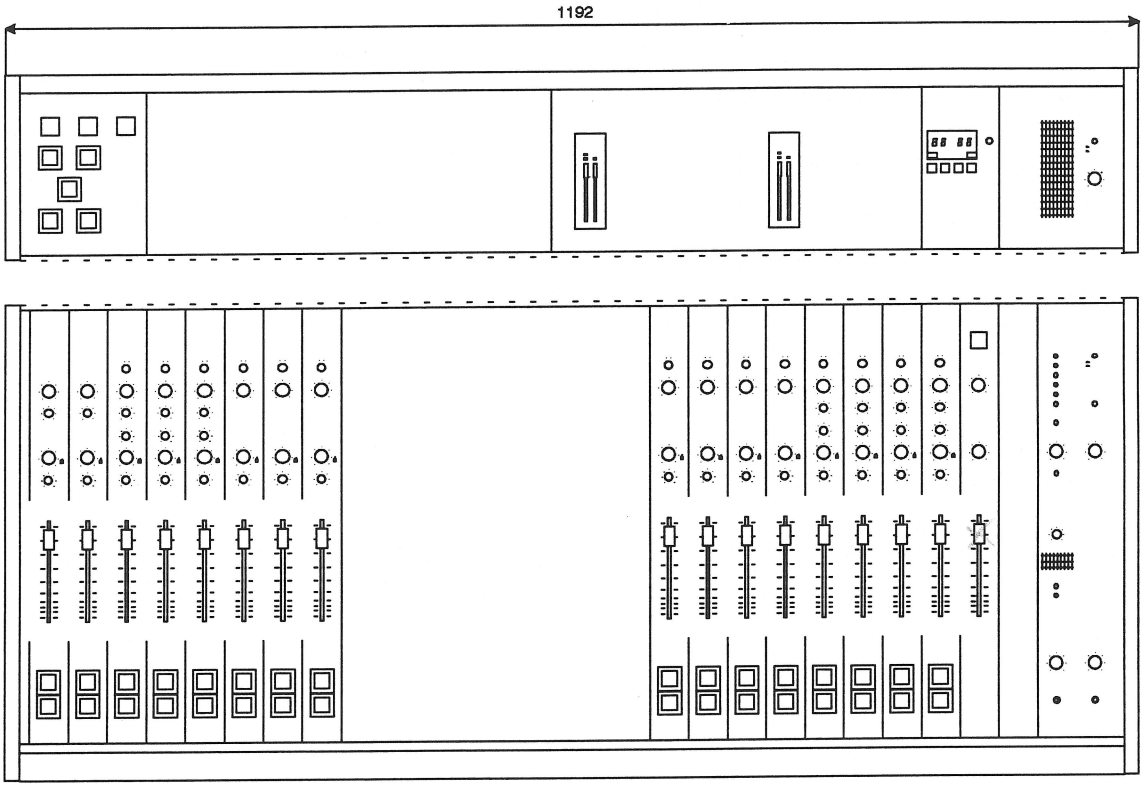

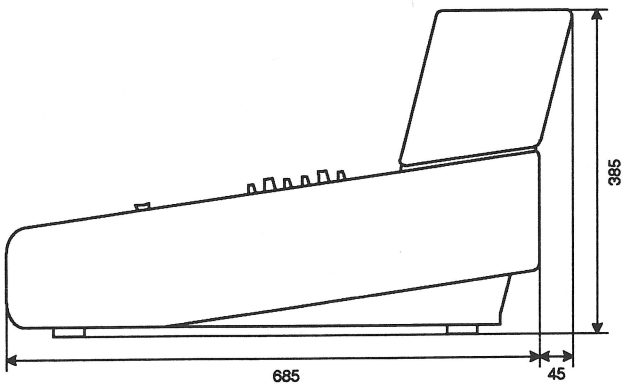

4. Abgleich

4.1 Vorbereitungen

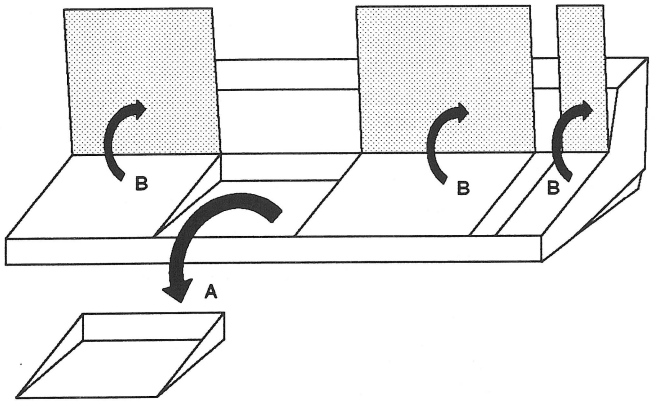

- Das Gerät vom Netz trennen.
- Alle Flachbahnregler in die Stellung $-\infty$, die Klangregler (Höhen- und Tiefenregler) in Mittelstellung, und die Eingangswahlschalter in die Stellung LINE und STEREO bringen.

- gemäss nebenstehender Darstellung vorgehen

- Die entsprechenden Schrauben mit einem "Torx"-Schraubendreher Nr. 8 lösen

- **A** Das Ablagebrett herausnehmen
- **B** Die Frontplatten nach oben klappen
- **C** Die Frontplatten in die Einsteckleisten schieben

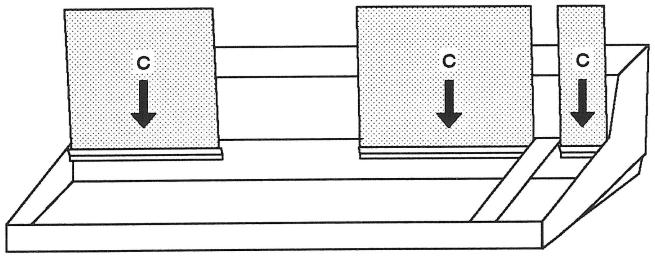

=> Die elektrischen Baugruppen sind somit für den Abgleich zugänglich.

- Das Gerät wieder an das Netz anschliessen.

4.2 Messgeräte

- Digitalvoltmeter
- NF-Voltmeter, Rz(in) ≥10 kOhm
- NF-Generator, Rs ≤ 200 Ohm
- Klirrfaktor-Messgerät

4.3 Allgemeines zum Abgleich

Pegeldefinitionen

Pegelangaben erfolgen in dBu

0 dBu entspricht 0,775 Veff

- Nennpegelangaben in dBu basieren ausschliesslich auf einem festgelegten Spannungswert als Bezugsgrösse.
- Die Bezugsgrösse 0,775 V des relativen Spannungspegels in dBu wurde von der Wertdefinition des absoluten Spannungspegels in dBu übernommen, jedoch ohne Bindung an die Definition (600 Ohm / 1 mW).

Nennpegel = Studiopegel bei Vollaussteuerung

- Der Nennpegel (auch Leitungspegel) entspricht dem Studiopegel bei Vollausteuerung.

typische Nennpegel sind:

+6 dBu	=	1,55 Veff
+10 dBu	=	2,45 Veff
+14 dBu	=	3,88 Veff

⚠ **Vorsicht:**

Elektrisierungsgefahr bei geöffnetem Gerät!
Teile im Gerät führen Netzspannung.

Von REVOX gelieferte Module können ohne Abgleicharbeiten in das Gerät eingesetzt werden. Ein erneutes Einmessen des Mischpultes ist nur nach Änderungen an den einzelnen Modulen erforderlich. Eine turnusgemässe Wartungseinmessung ist bei dieser Generation von Mischpulten nicht mehr erforderlich. Einzige Wartungsmassnahme bleibt das nachfolgend beschriebene gelegentliche Entmagnetisieren der Eingangsübertrager.

4.4 Entmagnetisierung der Mikrofon-Eingangsübertrager

- Unerlaubtes Anschliessen asymmetrischer Eingangsquellen, oder unbeabsichtigter Massenschluss der "a" und "b" Tonadern der Mikrofoneingänge mit zugeschalteter Phantomspeisung, treiben die Eingangsübertrager in die Sättigung und bewirken deren permanente Magnetisierung (Remanenz). Dies äussert sich nachteilig mit stark erhöhtem Klirrfaktor und dem sogenannten Mikrofonie-Effekt: leichte mechanische Einwirkungen auf das Mischpult, z.B. das Antippen, bewirken eine hörbare Modulation über die Ausgänge, auch bei unbenutzten Mikrofoneingängen.
- Remanenz kann sich auch im Laufe einer längeren Betriebsdauer in den Übertragungen kumulieren.
- Es empfielt sich deshalb, alle Mikrofoneingänge periodisch und vor Einmessvorgängen zu entmagnetisieren:

Vorgehen:

- Das Mischpult ausschalten (zum Schutz angeschlossener Lautsprecher)
- Am Mikrofoneingang über einen Trennkondensator mit einem NF-Generator eine Frequenz von weniger als 32 Hz einspeisen.
- Einspeisepegel sukzessive von 0 V auf 3 V erhöhen.
- Einspeisepegel **langsam** auf 0 V zurückregeln.

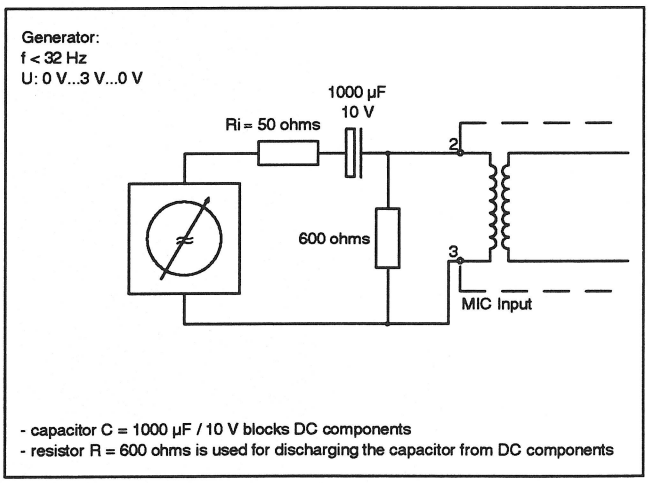

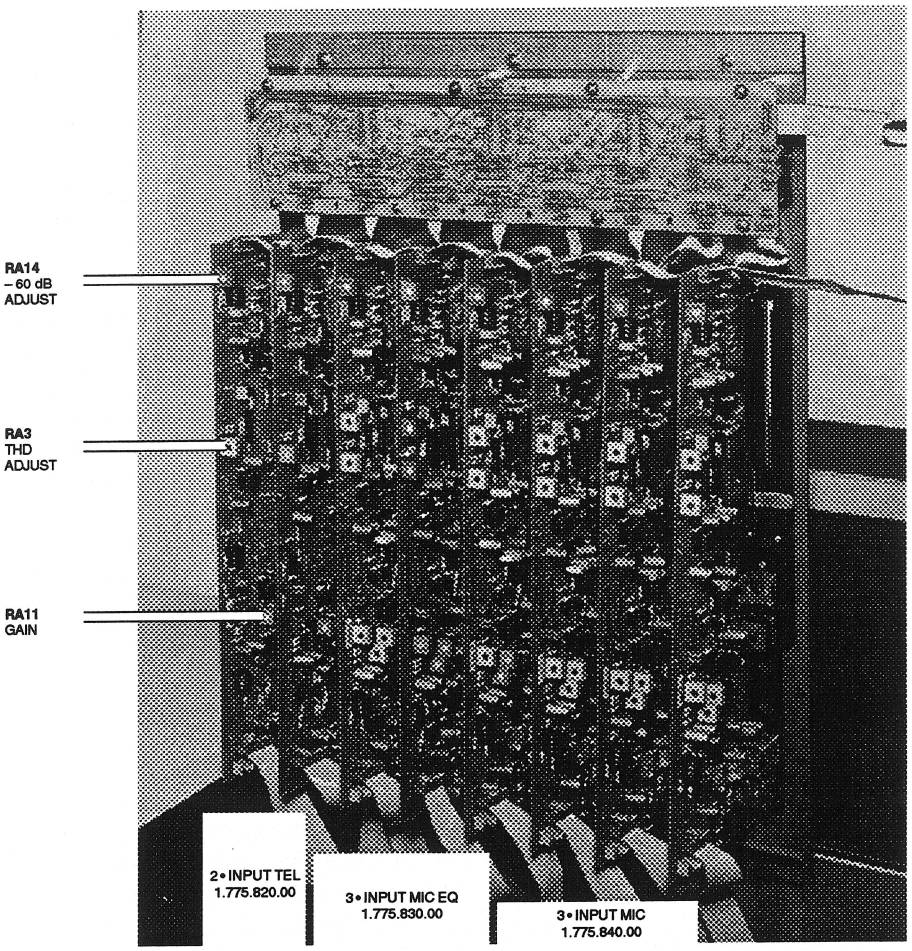
RA14
– 60 dB
ADJUST
RA3
THD
ADJUST
RA11
GAIN
2 • INPUT TEL
1.775.820.00
3 • INPUT MIC EQ
1.775.830.00
3 • INPUT MIC
1.775.840.00

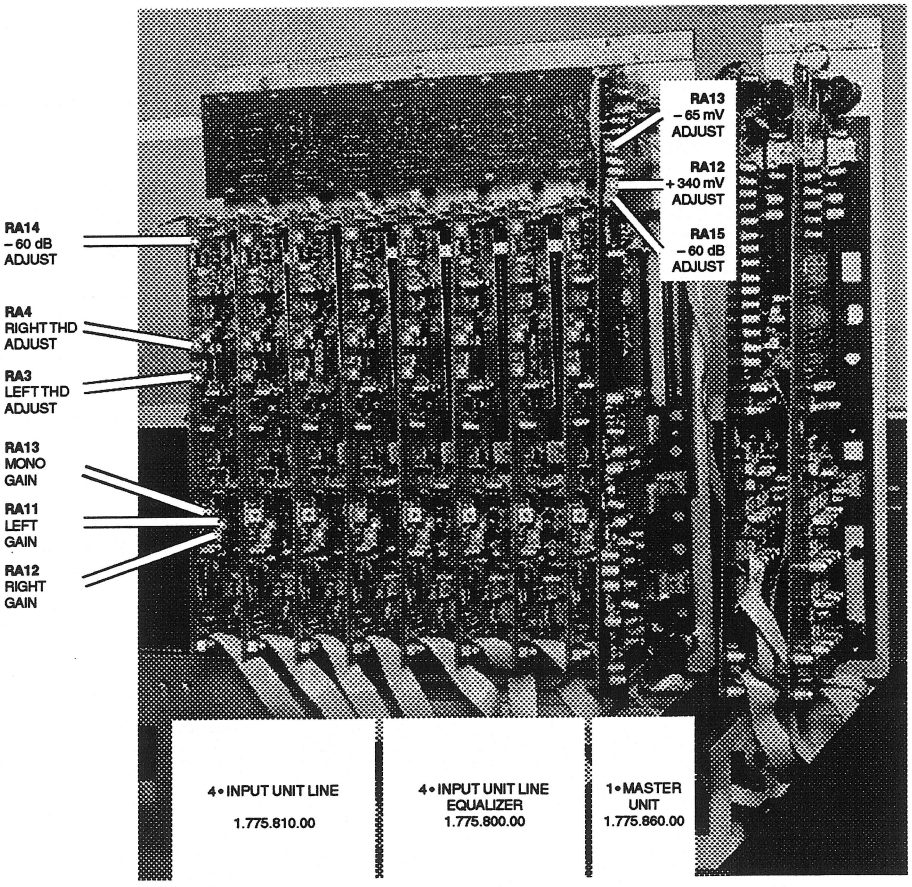
RA13
– 65 mV
ADJUST
RA12
+ 340 mV
ADJUST
RA15
– 60 dB
ADJUST
RA14
– 60 dB
ADJUST
RA4
RIGHT THD
ADJUST
RA3
LEFT THD
ADJUST
RA13
MONO
GAIN
RA11
LEFT
GAIN
RA12
RIGHT
GAIN
4 • INPUT UNIT LINE
1.775.810.00
4 • INPUT UNIT LINE
EQUALIZER
1.775.800.00
1 • MASTER
UNIT
1.775.860.00

4.5 Summen-Einheit 1.775.860

4.5.1 Spannungseinstellung Flachbahnregler

- Das Digitalvolltmeter auf der Summen-Einheit 1.775.860.00 an TP1 und 0 V anschliessen.
- Das Gerät einschalten.
- Die Spannung mittels dem Trimmpotentiometer RA12 auf +340 mV ± 1 mV abgleichen.
- Das Digitalvoltmeter auf der Summen-Einheit 1.775.860.00 an TP2 und 0 V anschliessen.
- Die Spannung mittels dem Trimmpotentiometer RA13 auf -65 mV ± 0.5 mV abgleichen.

4.5.2 Summenklirrfaktor

- Am symmetrischen Eingang RETURN L mit dem Generator 1 kHz/+6 dBu (1.55 Veff) einspeisen.
- Das NF Voltmeter am Ausgang TRANSMITTER L anschliessen.
- Den ON AIR Schalter auf ON stellen.
- Die Spannung am Transmitterausgang mittels Eingangspegelregler RETURN auf +6 dBu (1.55 Veff) einstellen.
- Das Klirr-Messgerät am Ausgang TRANSMITTER L anschliessen.
- Mit dem Trimmpotentiometer (RA9) auf minimalen Klirr abgleichen.
- Am symmetrischen Eingang RETURN R mit dem Generator 1 kHz/+6 dBu (1.55 Veff) einspeisen.
- Das Klirr-Messgerät am Ausgang TRANSMITTER R anschliessen.
- Mit dem Trimmpotentiometer (RA10) auf minimalen Klirr abgleichen.

4.6 Eingangseinheiten 1.775.800...1.775.840

4.6.1 Eingangspegel LINE INPUT 1.775.800/.810

- Den Eingangswahlschalter in Position STEREO bringen.
- Den Eingangspegelregler auf 0 dB (mittelrastend) Positionieren.
- Die ON Taste aktivieren.
- Den Flachbahnregler auf 0 dB stellen.
- Am symmetrischen Eingang LINE L mit dem Generator 1 kHz/+6 dBu (1.55 Veff) einspeisen.
- Das NF Voltmeter am Ausgang TRANSMITTER L anschliessen.
- Den ON AIR Schalter auf ON stellen.
- Die Spannung am Transmitterausgang mittels Trimmpotentiometer (RA11) auf +6 dBu (1.55 Veff) einstellen.
- Am symmetrischen Eingang LINE R mit dem Generator 1 kHz/+6 dBu (1.55 Veff) einspeisen.
- Das NF Voltmeter am Ausgang TRANSMITTER R anschliessen.
- Die Spannung am Transmitterausgang mittels Trimmpotentiometer (RA12) auf +6 dBu (1.55 Veff) einstellen.
- Den Eingangswahlschalter in Position MONO bringen.
- Die Spannung am Transmitterausgang mittels Trimmpotentiometer (RA13) auf +3 dBu (1.1 Veff) einstellen.

4.6.2 Eingangsklirr LINE INPUT 1.775.800/.810

- Den Eingangswahlschalter in Position STEREO bringen.
- Den Eingangspegelregler auf 0 dB (mittelrastend) Positionieren.
- Die ON Taste aktivieren.
- Den Flachbahnregler auf 0 dB stellen.
- Am symmetrischen Eingang LINE L (mit dem Generator 1 kHz/+6 dBu (1.55 Veff) einspeisen.
- Die Ausgangsspanung am CR MONITOR L mittels Ausgangspotentiometer auf +6 dB (1.55 Veff) einstellen (auf Monitor Print).
- Das Klirr-Messgerät am Ausgang CR MONITOR L anschliessen.
- Mit dem Trimmpotentiometer RA3 auf minimalen Klirr abgleichen.
- Am symmetrischen Eingang LINE R mit dem Generator 1 kHz/+6 dBu (1.55 Veff) einspeisen.
- Das Klirr-Messgerät am Ausgang CR MONITOR R anschliessen.
- Mit dem Trimmpotentiometer RA4 auf minimalen Klirr abgleichen.

4.6.3 Eingangspegel TELEPHONE 1.775.820

- Den Eingangspegelregler auf 0 dB (mittelrastend) Positionieren.
- Die ON Taste aktivieren.
- Den Flachbahnregler auf 0 dB stellen.
- Am symmetrischen Eingang TEL HYB IN mit dem Generator 1 kHz/+6 dBu (1.55 Veff) einspeisen.
- Das NF Voltmeter am Ausgang TRANSMITTER L anschliessen.
- Den ON AIR Schalter auf ON stellen.
- Die Spannung am Transmitterausgang mittels Trimmpotentiometer (RA11) auf +6 dBu (1.55 Veff) einstellen.

4.6.4 Eingangsklirr TELEPHONE 1.775.820

- Den Eingangspegelregler auf 0 dB (mittelrastend) Positionieren.
- Die ON Taste aktivieren.
- Den Flachbahnregler auf 0 dB stellen.
- Am symmetrischen Eingang TEL HYB IN mit dem Generator 1 kHz/+6 dBu (1.55 Veff) einspeisen.
- Die Ausgangsspanung am CR MONITOR L mittels Ausgangspotentiometer auf +6 dB (1.55 Veff) einstellen (auf Monitor Print).
- Das Klirr-Messgerät am Ausgang CR MONITOR L anschliessen.
- Mit dem Trimmpotentiometer RA3 auf minimalen Klirr abgleichen.

4.6.5 Eingangspegel MIC INPUT 1.775.830/.840

- Jumper JP1 in Position STEREO stecken.
- Den Eingangswahlschalter in Position LINE bringen.
- Den Eingangspegelregler auf 0 dB (mittelrastend) Positionieren.
- Die ON Taste aktivieren.
- Den Flachbahnregler auf 0 dB stellen.
- Am asymmetrischen Eingang STEREO L mit dem Generator 1 kHz/ 0 dBu (0.775 Veff) einspeisen.
- Das NF Voltmeter am Ausgang TRANSMITTER L anschliessen.
- Den ON AIR Schalter auf ON stellen.
- Die Spannung am Transmitterausgang mittels Trimmpotentiometer (RA11) auf +6 dBu (1.55 Veff) einstellen.
- Am asymmetrischen Eingang STEREO R mit dem Generator 1 kHz/ 0 dBu (0.775 Veff) einspeisen.
- Das NF Voltmeter am Ausgang TRANSMITTER R anschliessen.
- Die Spannung am Transmitterausgang mittels Trimmpotentiometer (RA12) auf +6 dBu (1.55 Veff) einstellen.
- Jumper JP1 in Position LINE stecken.
- Am symmetrischen Eingang LINE mit dem Generator 1 kHz/+6 dBu (1.55 Veff) einspeisen.
- Das NF Voltmeter am Ausgang TRANSMITTER R anschliessen.
- Die Spannung am Transmitterausgang mittels Trimmpotentiometer (RA13) auf +6 dBu (1.55 Veff) einstellen.

4.6.6 Eingangsklirr MIC INPUT 1.775.830/.840

- Jumper JP1 in Position STEREO stecken.
- Den Eingangswahlschalter in Position LINE bringen.
- Den Eingangspegelregler auf 0 dB (mittelrastend) Positionieren.
- Die ON Taste aktivieren.
- Den Flachbahnregler auf 0 dB stellen.
- Am asymmetrischen Eingang STEREO L mit dem Generator 1 kHz/ 0 dBu (0.775 Veff) einspeisen.
- Die Ausgangsspanung am CR MONITOR L mittels Ausgangspotentiometer auf +6 dB (1.55 Veff) einstellen (auf Monitor Print).
- Das Klirr-Messgerät am Ausgang CR MONITOR L anschliessen.
- Mit dem Trimmpotentiometer RA3 auf minimalen Klirr abgleichen.
- Am asymmetrischen Eingang STEREO R mit dem Generator 1 kHz/ 0 dBu (0.775 Veff) einspeisen.
- Das Klirr-Messgerät am Ausgang CR MONITOR R anschliessen.
- Mit dem Trimmpotentiometer RA4 auf minimalen Klirr abgleichen.

4.7 ANZEIGE EINHEIT

4.7.1 Aussteuerungsanzeige Master

- Den Eingangswahlschalter Kanal16 in Position STEREO bringen.
- Den Eingangspegelregler auf 0 dB (mittelrastend) Positionieren.
- Die ON Taste aktivieren.
- Den Flachbahnregler auf 0 dB stellen.
- Am symmetrischen Eingang STEREO L mit dem Generator 1 kHz/+6 dBu (1.55 Veff) einspeisen.
- Das NF Voltmeter am Ausgang TRANSMITTER L anschliessen.
- Den ON AIR Schalter auf ON stellen.
- Die Spannung am Transmitterausgang mittels Eingangspegelregler auf +6 dBu (1.55 Veff) einstellen.
- Mit dem Trimmpotentiometer RA3 (von der Frontseite zugänglich) den linken Anzeigebalken so einstellen, das die 0 dB-LED aufleuchten.
- Den rechten Balken auf die gleiche Art mit RA2 abgleichen.
- Die Helligkeit der Anzeige kann mit RA1 eingestellt werden.

4.7.2 Aussteuerungsanzeige Monitor

- Den Eingangswahlschalter Kanal 16 in Position STEREO bringen.
- Den Eingangspegelregler auf 0 dB (mittelrastend) Positionieren.
- Die ON Taste aktivieren.
- Den Flachbahnregler auf 0 dB stellen.
- Am symmetrischen Eingang STEREO L mit dem Generator 1 kHz/+6 dBu (1.55 Veff) einspeisen.
- Das NF Voltmeter am Ausgang CR MONITOR L anschliessen.
- Am Monitorselektor die Taste MASTER drücken und die Taste PFL-AUTO Ausschalten.
- Die Spannung am Ausgang CR MONITOR mittels Monitorregler auf +6 dBu (1.55 Veff) einstellen.
- Mit dem Trimmpotentiometer RA3 (von der Frontseite zugänglich) den linken Anzeigebalken so einstellen, das die 0 dB-LED aufleuchten.
- Den rechten Balken auf die gleiche Art mit RA2 abgleichen.
- Die Helligkeit der Anzeige kann mit RA1 eingestellt werden.

Content

1. General information GB3

2. Operator controls, functions, connectors GB4
(arranged by units)

2.1 INPUT UNIT MIC GB5
2.2 INPUT UNIT LINE GB7
2.3 INPUT UNIT TELEPHONE GB8
2.4 MASTER UNIT GB10
2.5 CONTROL ROOM UNIT GB11
2.6 STUDIO UNIT GB13
2.7 METER PANEL GB15
2.8 POWER SUPPLY UNIT GB17
2.9 INTERFACES GB17

3. Specifications GB18

3.1 Units GB18
3.2 The MB16 mechanical design GB19
3.3 Expandability and options GB19
3.4 Technical data GB20
3.5 Dimensions GB20

4. Alignment GB22

4.1 Preparation GB22
4.2 Measuring instruments GB22
4.3 General alignment information GB23
4.4 Demagnetizing the microphone input transformer GB23
4.5 Master unit ..... 1.775.860 ..... GB25
4.5.1 Fader voltage alignment GB25
4.5.2 Master distortion GB25
4.6 Input units ..... 1.775.800 / 1.775.840 ..... GB25
4.6.1 Input level ..... LINE INPUT ..... 1.775.800 / 1.775.810 ..... GB25
4.6.2 Input distortion ..... LINE INPUT ..... 1.775.800 / 1.775.810 ..... GB25
4.6.3 Input level ..... TELEPHONE ..... 1.775.820 ..... GB25
4.6.4 Input distortion ..... TELEPHONE ..... 1.775.820 ..... GB26
4.6.5 Input level ..... MIC INPUT ..... 1.775.830 / 1.775.840 ..... GB26
4.6.6 Input distortion ..... MIC INPUT ..... 1.775.830 / 1.775.840 ..... GB26

4.7 Display unit GB27
4.8 Output meter, master GB27
4.9 Output meter, monitor GB27

5. Circuit diagrams, PCBs, parts

1. General information

To help you find the operator controls and connectors quickly, this instruction contains a fold-out page with a general arrangement drawing of the MB16.

On this drawing the units are identified with the section number under which you will find a detailed description and graphs.

A block diagram as well as PC layouts and component lists can be found in Section 5, Diagrams.

2. Operator controls, functions, connectors

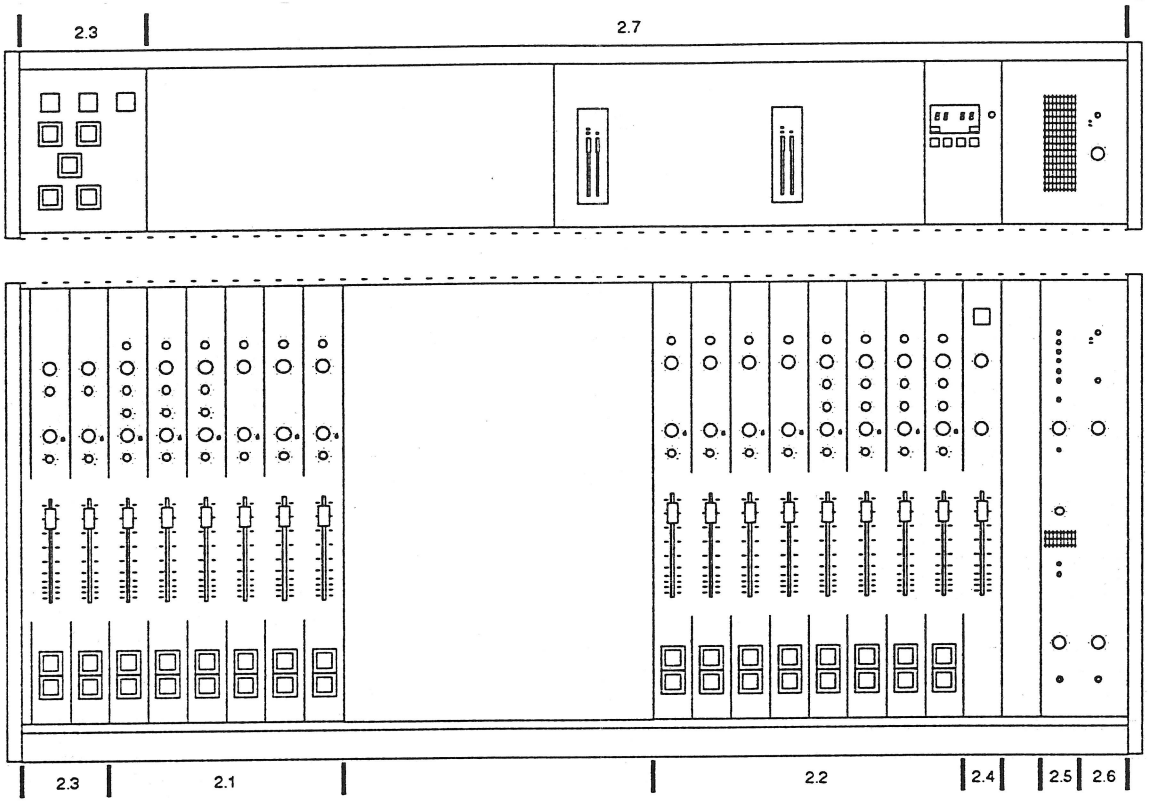

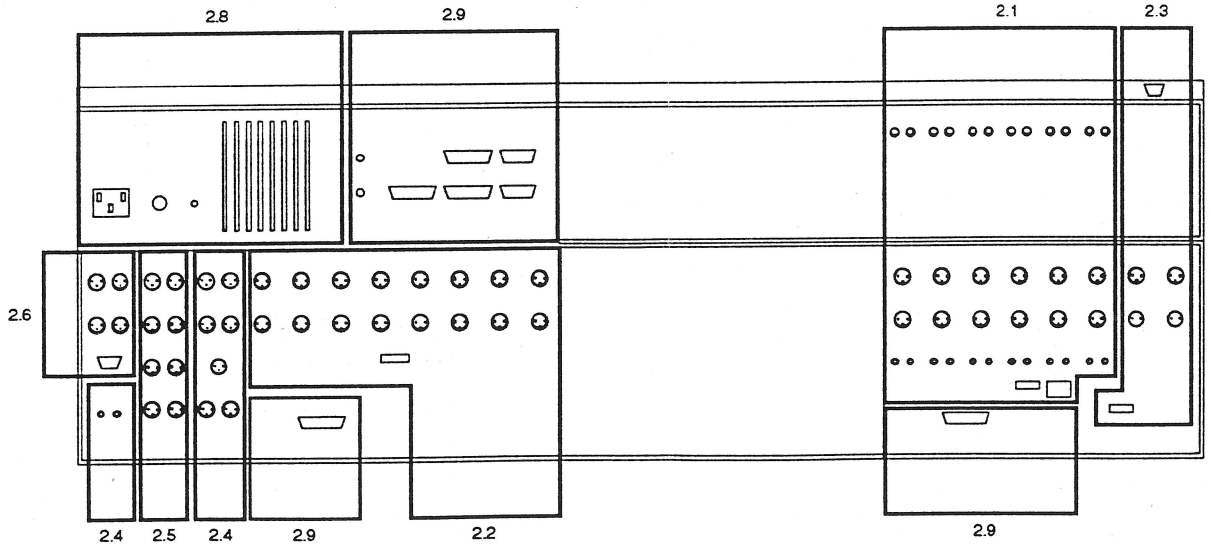

2.1 INPUT UNIT MIC

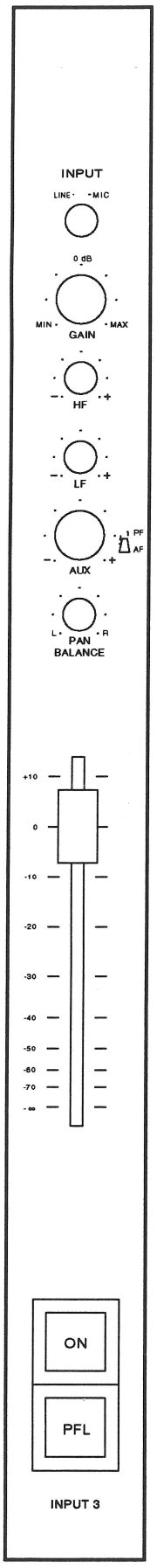

Operator controls

INPUT SELECTOR Selector switch for the following inputs:

LINE: High level input
The changeover between MONO BAL (balanced) and STEREO (unbalanced) takes place internally through the jumpers JPT on the INPUT UNITs MIC 1.775.830/.840.

MIC: Balanced and floating microphone input.
The bass cut filter can be activated internally with the jumpers JP2 on the INPUT UNITs MIC 1.775.830/.840.

Caution: Do not simultaneously connect high-level signal sources and stereo hi-fi signal sources!

GAIN Input gain control with detent at 0 dB for adjusting the level of the various signal sources. The calibration mark on the scale designates the 0 dB gain across the entire channel when the input selector is in the LINE position and the INPUT and MASTER fader in the 0 dB position.

HF Treble control: ±15 dB at 20 kHz, in the centre detent position no influence on the frequency response.

LF Bass control: ±15 dB at 20 kHz, in the centre detent position no influence on the frequency response.

AUX Level control for AUX bus (mono), selectable with push/pull switch,
pressed: After fader
pulled: Before fader

PAN / BALANCE Panoramic potentiometer with centre detent for MIC, LINE (distribution to the mono signal to the left-hand and right-hand channel), balance control for stereo signals.

FADER Channel feeder (stereo), range +10 dB ... - 70 dB.

ON Red, self-holding luminous key.

Key not pressed: The channel is muted, regardless of the fader setting (lamp off).

Key pressed: The channel depends on the fader setting. If the fader is at the lower stop position, the channel is muted; the lamp glows dimly. When the fader is opened, the audio channel becomes active; the lamp glows brightly.

The ON key can be deactivated by cutting open a jumper wire (PFL unit 1.775.850, 2 x W1...W8).

PFL Green, locking key for pre-fade listening (mono).

2.1 INPUT UNIT MIC

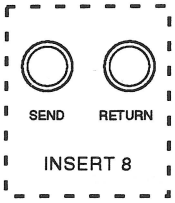

Connector panel

INSERT MONO SEND / RETURN Balanced input/output (6.3 mm jack) for inserting a limiter.

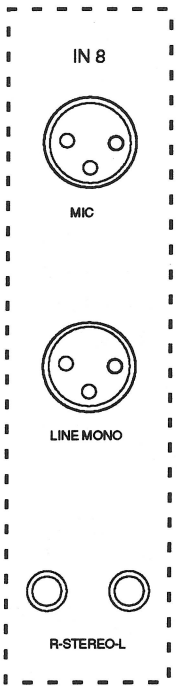

MIC Balanced and floating microphone input (XLR female)

LINE MONO Balanced high-level input (XLR female)

STEREO L / R Unbalanced high-level input for connecting stereo hi-fi sources (cinch).

Dip switches

CR MONITOR OUT Programming for muting the monitor bus when the microphone fader is open.
If the jumper wire W1 is cut through (speaker unit 1.775.890), the speaker built into the MB16 is always active, even when CR monitor cut is set.
Caution! Feedback.

STUDIO MONITOR CUT Programming for muting the studio bus when the microphone fader is open.

RESTART STOP WATCH Programming for starting the stop watch when the fader is opened.

2.2 INPUT UNIT LINE

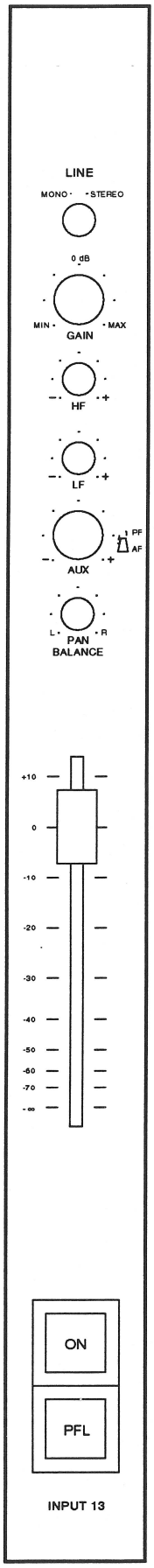

Operator controls

MODE SELECTOR Mono / stereo selector switch
MONO: The stereo signals are switched to MONO.
STEREO: The stereo signals left and right are separate and connected to the two channels.

GAIN, HF, LF, AUX, PAN / BALANCE FADER, ON, PFL See 2.1 INPUT UNIT MIC.

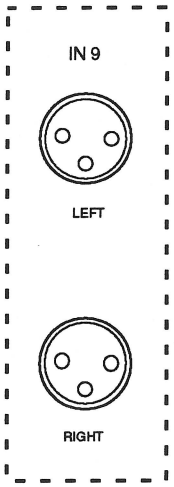

Connector panel

LEFT Balanced high-level input for the left-hand stereo signal (XLR female).

RIGHT Balanced high-level input for the right-hand stereo signal (XLR female).

Dip switches

RESTART
STOP WATCH See 2.1 Input unit MIC.

2.3 INPUT UNIT TELEPHONE

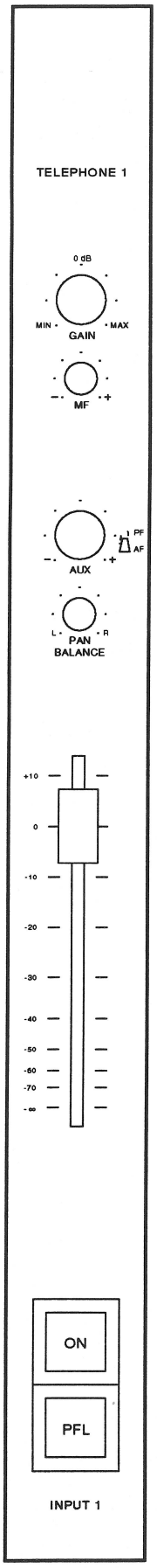

Operator controls

GAIN, AUX PAN / BALANCE, FADER, ON, PFL — See 2.1 INPUT UNIT MIC

MF — Midrange control: ±15 dB at 2 kHz, in centre detent position no influence on the frequency response.

Operator controls on the meter panel

CALL — Pilot lamp (red) for incoming telephone call. The lamp contacts (24 V) are connected to the D-type REMOTE TELEPHONE connector. The lamp is controlled externally.

CR MON CUT — Pilot lamp signaling that the DJ microphone fader is open. Programming with the DIP switch CR MONITOR CUT.

HOLD — Illuminated self-holding key for selecting the externally connected telephone hybrid via the REMOTE TELEPHONE socket. The caller's telephone line is put on hold. At the same time the N-1 mix is connected to the TO TEL HYB socket (XLR male).

CONFERENCE — Illuminated self-holding key for connecting one of the two external callers. With TALK BACK the DJ can connect himself into the conference.

TALK BACK — Illuminated self-holding key for connecting the DJ microphone to the caller's telephone line. The DJ hears the caller through the monitor speaker or headphones with a level that is down by 20 dB.

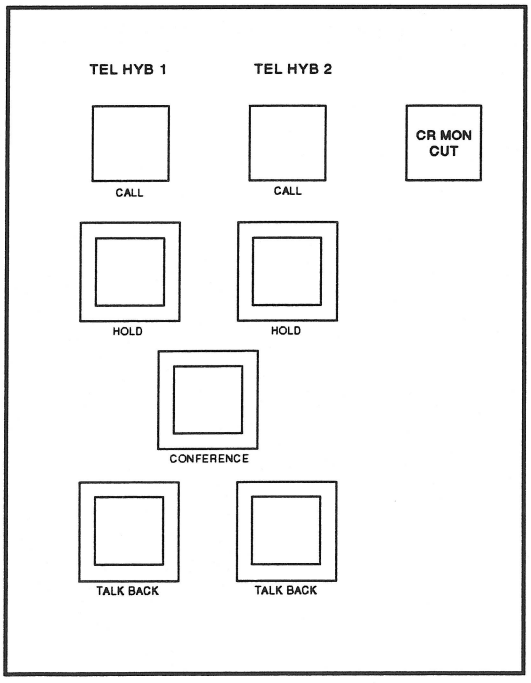

2.3 INPUT UNIT TELEPHONE

REMOTE TELEPHONE

Connector panel

REMOTE TELEPHONE Remote control contacts for the telephone hybrid 1 and 2 (9-pin D-type, female).

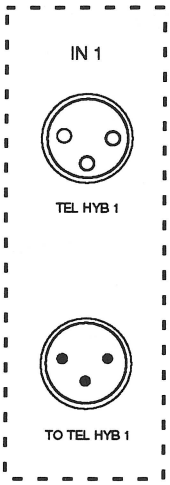

TEL HYB Balance high-level input (XLR female).

TO TEL HYB Balanced high-level output (XLR male). From the MASTER signal the own channel is subtracted and added to the externally connected telephone hybrid (N-1 mix).

DIP switches

DJ MIC SELECTOR

DJ MIC SELECTOR DIP switch for selecting the DJ microphone for connecting the disk jockey with callers 1 and 2.

2.4 MASTER UNIT

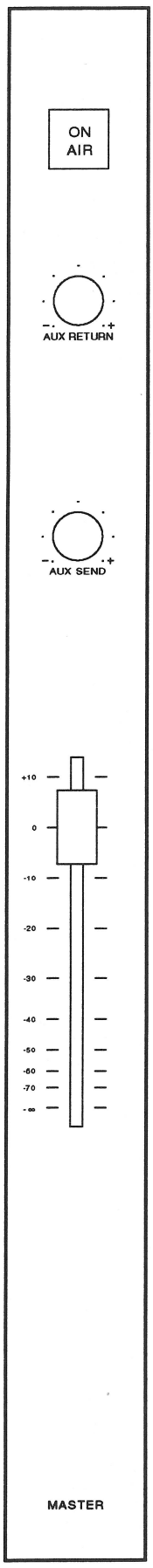

Operator controls

ON AIR Illuminated self-holding key (red), protected with a cover. When this key is pressed the fader position has no influence on the output signal. The master outputs are all active. When this key is released, the TO TRANSMITTER output (transformer) is disabled; the fader now acts on the TO LOGGING outputs (transformerless) and the unbalanced output.

AUX RETURN Level trimmer potentiometer of the AUX RETURN inputs (stereo).

AUX SEND Level trimmer potentiometer for the AUX bus master signal (mono).

FADER MASTER fader (stereo), range +10 dB ... -70 dB, only effective when the ON AIR key is not pressed.

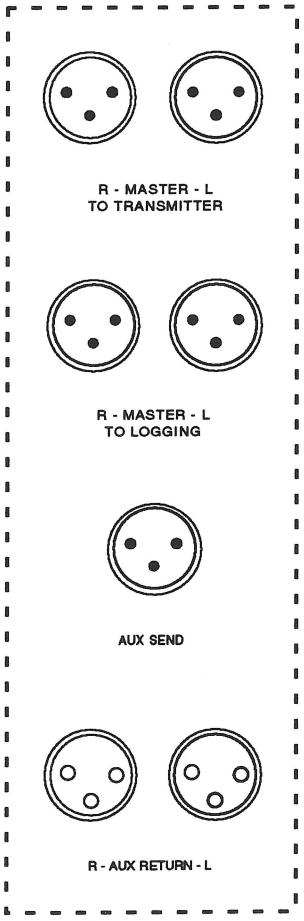

Operator controls

MASTER TO TRANSMITTER L / R Balanced and floating master signal output (XLR male).

MASTER TO LOGGING L / R Balanced master signal output (XLR male.
The levels can be set with jumpers JP1, 2 on the Master Unit 1.775.860.

AUX SEND Balanced AUX bus output (XLR male).

AUX RETURN L / R Balanced auxiliary inputs to the left-hand and right-hand master bus (XLR female).

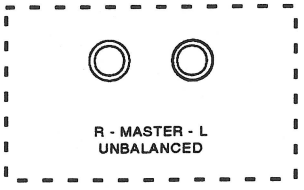

UNBALANCED L / R Unbalanced master signal output (phono plug).

2.5 CONTROL ROOM MONITOR UNIT

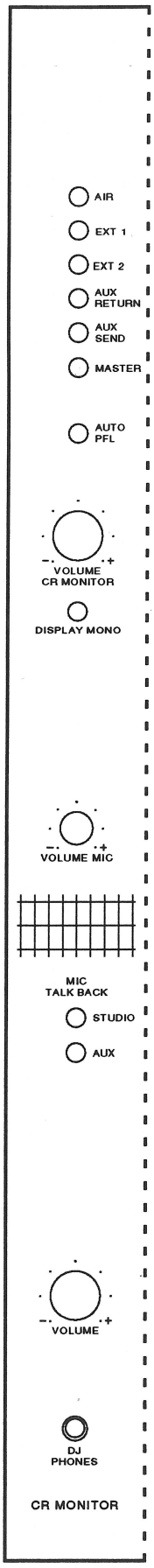

Operator controls

AIR, EXT1, EXT2, AUX RETURN, AUX SEND, MASTER

Mutually canceling, self-holding push buttons for through-connecting the corresponding signal to the monitor bus.

AUTO PFL

When this button is pressed, the monitor bus is automatically switched to the PFL bus as soon as the illuminated PFL button of an input channel is pressed.

VOLUME CR MONITOR

Potentiometer for adjusting the level of the left-hand and right-hand monitor output.

DISPLAY MONO

Momentary action push button; connects the monitor display to mono mode for checking the mono compatibility of a stereo signal.

MIC TALK BACK

VOLUME MIC

Sensitivity control for the microphone installed below.

STUDIO

Recording on the studio bus.

AUX

Recording on the auxiliary bus.

DJ PHONES

VOLUME

Headphones volume control.

PHONES

Stereo jack socket for connecting the headphones.

2.5 CONTROL ROOM MONITOR UNIT

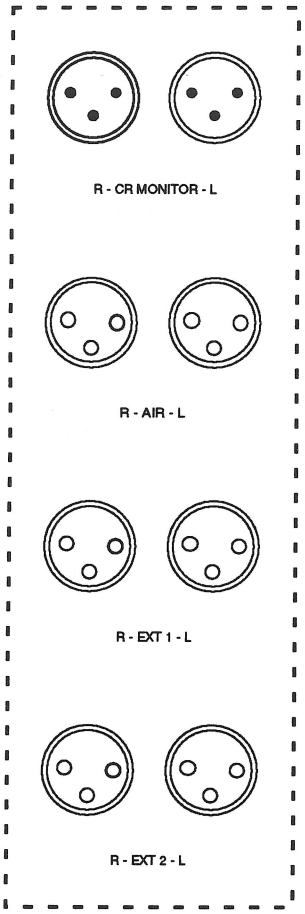

Connector panel

CR MONITOR OUT L / R

Balance outputs of the left-hand and right-hand monitor bus (XLR male). The output level can be adjusted with the VOLUME CR MONITOR control.
These outputs are muted by the signal programmed with the CR MONITOR CUT DIP switches.

AIR, EXT 1, EXT 2 L / R

Balanced, external inputs to the left-hand and right-hand monitor bus (XLR female).

2.6 STUDIO UNIT

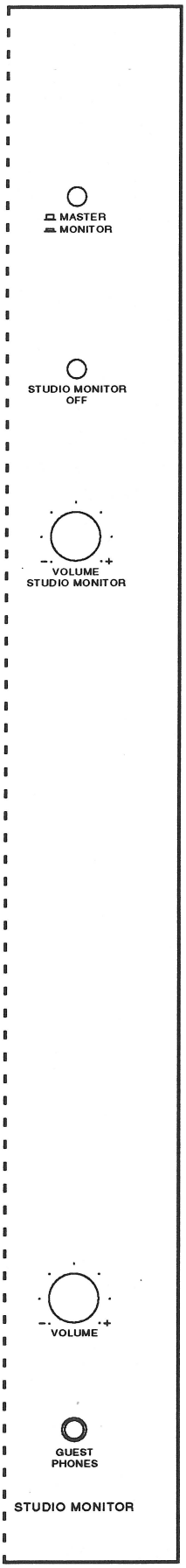

Operator controls

MASTER / CR MONITOR Self-holding push button; when this button is released the master is connected to the studio bus, otherwise the CR monitor is connected.

STUDIO MONITOR OFF LED, lights if the studio monitor is switched off by the opened microphone fader.

VOLUME STUDIO MONITOR Potentiometer for adjusting the level of the left-hand and right-hand studio output.

GUEST PHONES

VOLUME Headphones volume control.

PHONES Stereo jack socket for connecting the headphones.

2.6 STUDIO UNIT

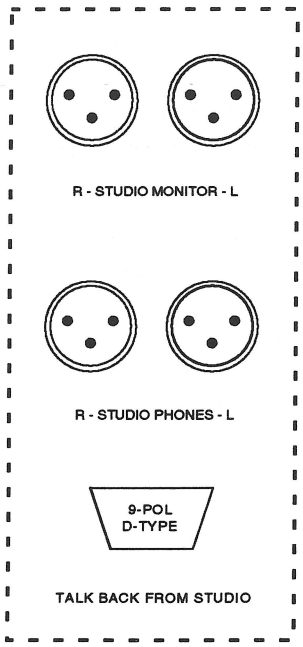

Connector panel

STUDIO MONITOR L / R

Balanced outputs of the left-hand and right-hand studio bus (XLR male). The output level can be adjusted with the VOLUME STUDIO MONITOR potentiometer. These outputs are muted by the signal programmed with the STUDIO MONITOR CUT DIP switches.

STUDIO PHONES L / R

Balanced outputs of the left-hand and right-hand studio bus (XLR male). these outputs are not muted.

TALK BACK FROM STUDIO

Balanced, external input from studio to CR monitor. An external, floating contact (Talkback key in the studio) connects the Talk Back signal to the right-hand CR monitor channel, if the DJ MIC fader is closed. The left-hand CR monitor channel contains the CR monitor signal with a level that is down by 20 dB (9-pin D-type female).

2.7 METER PANEL

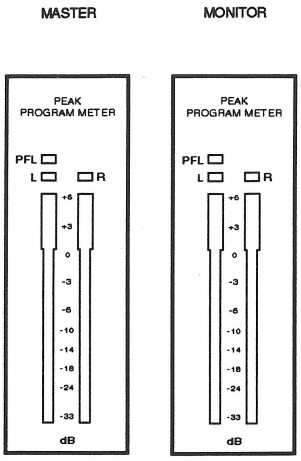

Operator controls and display elements

PPM MASTER LED peak meter for indicating the master signal.

PPM MONITOR LED peak meter for indicating the monitor signal.

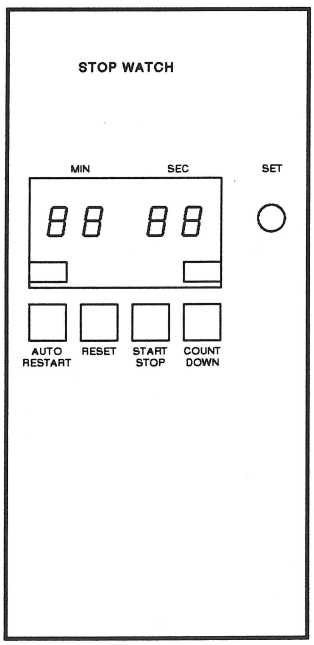

STOP WATCH

AUTO RESTART Push button. When this key is pressed the red LED above the key lights up. The time measurement starts at "00:00" as soon as the fader is opened.

RESET Push button for resetting the clock to "00.00".

START STOP Push button for measuring the ELAPSED TIME. The measurement starts when this button is pressed the first time. When the button is pressed the second time, the elapsed time is shown, and the third time the running lock is again displayed.

COUNT DOWN Push button; When this key is pressed the red LED above the key lights up. The count down time is set with the SET potentiometer, and the count down is started by pressing this key a second time.

SET Potentiometer for setting the COUNT DOWN TIME.

2.7 METER PANEL

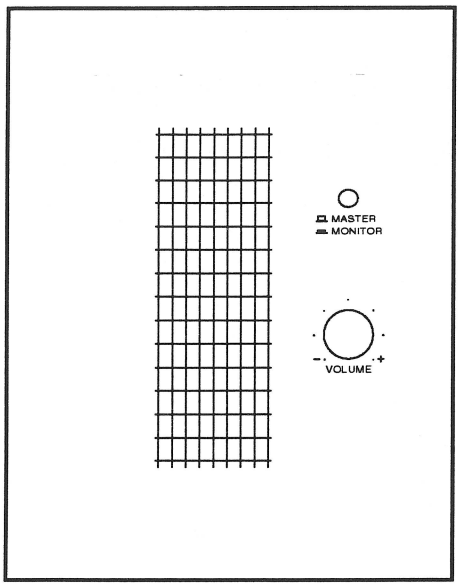

MONITOR SPEAKER

Operator controls

MONITOR SPEAKER Built-in speaker for monitoring the monitor or master bus.

MASTER / CR MONITOR Self-holding push button. When this key is released, the master is connected to the monitor speaker, otherwise the CR monitor is connected.

VOLUME Potentiometer for adjusting the monitor speaker volume.

2.8 POWER SUPPLY UNIT

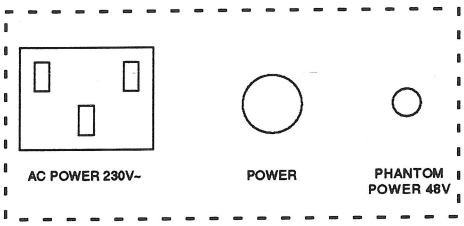

Operator controls on the connector panel

POWER ON / OFF Power switch

AC POWER 230 V- AC power inlet, 3-pin.

PHANTOM POWER 48 V ON / OFF Self-holding push button for activating the phantom supply of all microphone inputs for capacitor microphones.

2.9 INTERFACES

Connector panel

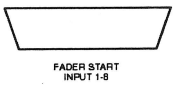

FADER START INPUT 1-8

Fader start contacts (2-way) of the input units 1...8 (25-pin, D-type, female).

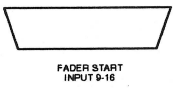

FADER START INPUT 9-16

Faderstart contacts (2-way) of the input units 9...16 (25-pin, D-type, female).

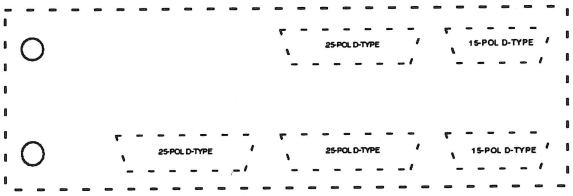

VCA CONTROL INPUT 1-8
(Option)

Gain control for the input units 1..8.
Control voltage:
0 V: Potentiometer fully open v = 0 dB,
5 V: Potentiometer fully closed v = -100 dB
(15-pin, D-type, male)

VCA CONTROL Input 9-16
(Option)

Gain control for the input units 9..16.
Same control voltages as for inputs 1..8.

In addition, two holes for mounting headphones sockets have been provided. Additional sockets for special applications (e.g. 25-pin sockets) can also be accommodated.

3. Specifications

3.1 Units

The mixing console is subdivided into the following function groups:

Input units:

- Telephone with presence potentiometer
- Line microphone with bass and treble control
- Line microphone without bass and treble control
- The following functions are jumper programmable on the line mic inputs:
- Bass cut for microphone
- Deactivation of INSERT MONO
- Stereo unbalanced for line
- Line with bass and treble control
- Line without bass and treble control

Output units

XLR assignment:

1	=	screen
2	=	a-wire
3	=	b-wire

Master:
- Output voltage can be set with jumper:

BALANCED:	+6 dBu	=	0.775 Veff
	+10 dBu	=	2.45 Veff
	+ 14 dBu	=	3.88 Veff
UNBALANCED:	0 dBu	=	1.55 Veff
	+4 dBu	=	1.23 Veff
	+8 dBu	=	1.95 Veff

- Outputs switchable to mono with jumper JP1 on the MASTER UNIT PCB 1.775.860.
  CR monitor
  Studio monitor

Connection units

Connection unit Mic
- Contains the connections for the two telephone units and the 6-line mic units.

Connection unit Line
- Contains the connections for 8 line units.

Connection unit Master
- Contains the connections for the master CR monitor and studio monitor unit.

PFL unit
- PFL and ON keys for 8 channels are combined on one PCB module.

Talk back unit
- This module contains the keys for the talk back function with the two telephone units.

Speaker unit
- Small speaker with volume control for monitoring the master or CR monitor bus.

Meter unit
- For the master the same instrument is used as for the monitor:
  PEAK METER with two LED arrays with 24 segments each, 18 steps green, 6 steps red. The brightness as well as the levels for both channels can be adjusted from the front panel with the aid of a screwdriver. The monitor meter contains a LED array for indicating the PFL, AUX SEND (mono only) functions.

Power supply unit
- The power supply unit is installed on the right-hand side in the instrument bridge and consists of a 200 VA toroidal transformer and the power pack.
  The line voltage can be internally switched between 115 V ±10% and 230 V ±10%.

  Stabilized secondary voltages:

+15 V / 1 A	exists twice for audio
-15 V / 1 A	exists twice for audio
+6 V / 1 A	exists twice for logic and lamps
+48 V	for phantom supply

3.2 The MB16 mechanical design

The supporting structure of the mixing console consists of a sheet steel trough. The front panel combines several input units. Each front panel can be tilted upward. The input units are fastened to the front panel by means of welded pins.
The instrument penthouse contains the corresponding units on 40.64 mm
wide front panels. A 19" chassis (option) can be installed. This chassis accommodates Eurocards.
The rear panel is also subdivided into panels, analogous to the front panels. These panels support the PCBs with the XLR sockets.
The cabling is largely implemented with flat cables and the MICRO MATCH connector system from AMP.
The side panels as well as the front padding are fixed to the housing from the inside.

3.3 Expandability and options

- The storage surface between input 8 and 9 can be replaced by 8 line input units. The power supply can handle the additional load.

- The console has been prepared for using one additional DJ PHONES or GUEST PHONES connection each. On the MB16 rear panel as well as at the bottom, two bores for headphones sockets have been provided. The pins for the headphones signals are located on the following PCBs:

DJ PHONES:	1.775.870	P1...P3
GUEST PHONES:	1.775.880	P1...P3

- VCA unit, individual unit for each input channel, derived from the A779.

- Rack kit, 19" chassis.
- Side panels for recessed mounting.

- Connector kit, matching connector for each socket.

- Special side panels 1.775.510.18
  For installing the MB 16 into a desk.
  For dimensions refer to the diagrams in Section 5.

Spare parts 1.775.510.40

Pos.	# Pieces	Part no.	Description	
1	2	1.775.370.32	Knob, Ø10 mm	dark grey
2	2	1.775.370.31	Knob, Ø15 mm	dark grey
3	2	42.01.0252	Cap, Ø10 mm	black
4	2	42.01.0254	Cap, Ø10 mm	blue
5	2	42.01.0255	Cap, Ø10 mm	yellow
6	2	42.01.0257	Cap, Ø15 mm	light grey
7	2	42.01.0260	Cap, Ø15 mm	red
8	2	42.01.0261	Cap, Ø15 mm	blue
9	1	1.011.094.02	Push button + top	red
10	1	1.011.094.04	Push button + top	yellow
11	1	1.011.094.05	Push button + top	green
12	1	1.011.094.08	Push button + top	light grey
13	2	1.911.000.32	Fader knob	red
14	2	1.911.000.34	Fader knob	yellow
15	2	1.911.000.35	Fader knob	green
16	2	1.911.000.36	Fader knob	blue
17	2	1.911.000.39	Fader knob	white
18	3	51.01.0121	Power fuse 2.5 A	slow
19	1	54.42.1050	Mains connector	female
20	10	51.02.0154	Bi-pin lamp	T1

Connector kit 1.775.510.41

Pos.	# Pieces	Part no.	Description
1	13	54.02.0281	XLR jack
2	38	54.02.0280	XLR plug
3	14	54.02.0601	Phone jack
4	7	REVOX 33042	Stereo cinch cable 2m
5	2	54.13.7020	Case to 9-pole D-type
6	2	54.02.0180	Plug 9-pole D-type
7	2	54.13.7022	Case to 25-pole D-type
8	2	54.02.0184	Plug 25-pole D-type

3.4 Technical data

Inputs

Impedance:

MIC ..... > 1.2 kohms
LINE, STEREO, AUX RETURN ..... 47 kohms

Control range for 0 dB on the peak-meter:

GAIN MIC ..... -60...0 dBu
GAIN LINE ..... -20...+16 dBu
AUX RETURN ..... - 4...+22 dBu

Maximum input level (THD ≤ 1%):

MIC ..... 0 dBu
LINE, AUX RETURN ..... +26 dBu

Outputs

Impedance:

MASTER, balanced ..... < 50 ohms
MASTER, unbalanced ..... < 1 kohm
AUX SEND ..... < 50 ohms

Output level at 0 dB on the peak-meter: .

AUX SEND ..... + 6 dBu
MASTER to TRANSMITTER ..... +6 / +10 / +14 dBu
(isolation transf.)
MASTER to LOGGING ..... +6 / +10 / +14 dBu
(transformerless)
MASTER, unbalanced ..... 0.775 / 1.25 / 2 V
adjustable with jumper
CR MONITOR, STUDIO MONITOR ..... max. +16 dBu
STUDIO PHONES ..... + 6 dBu

Maximum output level:

MASTER, balanced ..... +24 dBu
MASTER, unbalanced ..... 8 V

Frequency response

Linear (HF, LF in center position) ..... 20 Hz...20 kHz ..... ± 1 dB
BASS CUT: 12 dB/octave ..... -3 dB point @ 70 Hz

HF (Treble): ..... Attack point ..... 1 kHz
..... Boost / cut @ 20 kHz ..... ± 15 dB

LF (Bass): ..... Attack point ..... 1 kHz
..... Boost / cut @ 20 Hz ..... ± 15 dB

Signal-to-noise ratio

all values are weighted "A"

1 x MIC: ..... > 63 dB
@ -60 dBu input voltage termination = 200 ohms

1 x LINE: ..... > 86 dB
@ 0 dBu input voltage termination = 1 kohms

MASTER fader closed: ..... > 100 dB

Harmonic distortion

MIC (-20 dBu input): ..... < 0.03% ..... @ 1kHz
..... < 0.15% ..... 30 Hz...15 kHz

LINE (0 dBu input, +6 dBu output): ..... < 0.03% ..... @ 1 kHz
..... < 0.15% ..... @ 20 Hz...20 kHz

Crosstalk

all values @ 10 kHz

Channel separation STEREO L / R ..... > 50 dB
Switch-off attenuation INPUT ..... > 86 dB
MASTER ..... > 100 dB

Indicators

Stereo peak meters with 24-segment bargraph

Ranges: .....+6..+ 1 dB in 1 dB steps, red
.....0..- 6 dB in 1 dB steps, green
..... -7..-18 dB in 2 dB steps, green
.....19..-33 dB in 3 dB steps, green

Power supply

Voltage selectable by internal jumper

115 / 230 V AC .....50..60 Hz, max. 200 W
Detachable mains lead, 3-prong connector with protective ground

Dimensions

(W x H x D): .....1192 x 385 x 730 mm

Weight:

..... 46 kg net

Subject to change

3.5 Dimensions (mm)

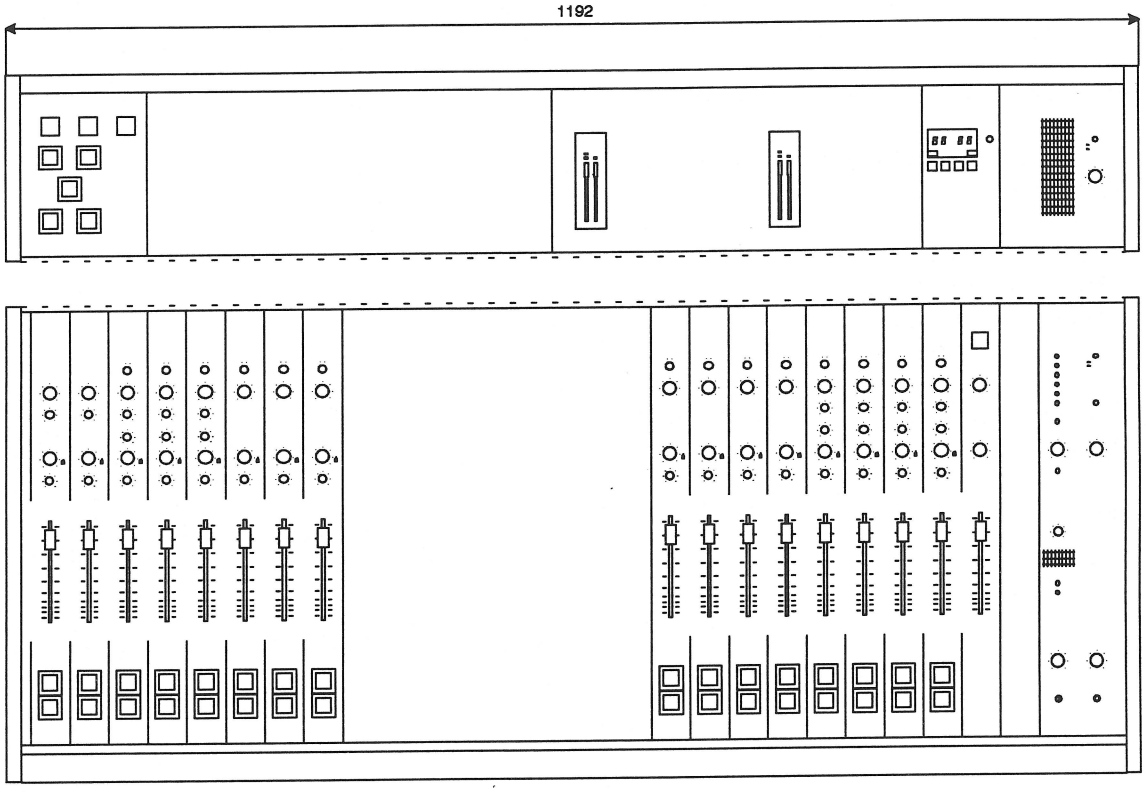

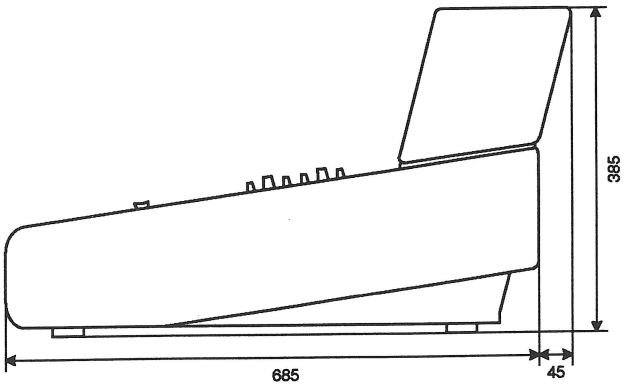

4. Alignment

4.1 Preparations

- Disconnect the mixing console from the power source.
- Set all faders to the $-\infty$ position, the treble and bass controls to the center position, and the input selector to the LINE and STEREO position.

- Proceed according to the illustration opposite

- Unfasten the corresponding screws with a "Torx" screwdriver No. 8.

- **A** Remove the storage surface panel
  B Swing up the front panels
  C Insert the front panels into the plug-in strips

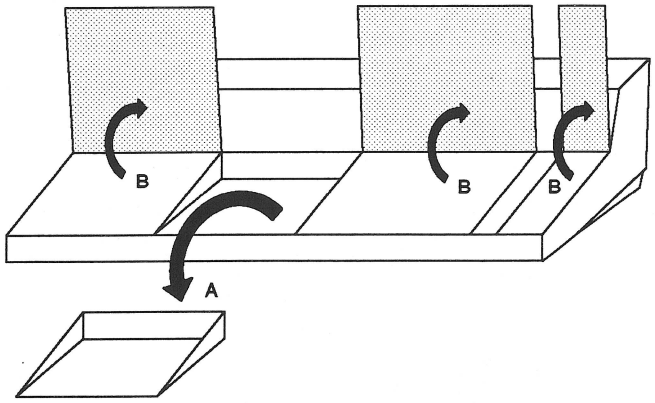

=> The electrical modules are now accessible for the alignment.

- Reconnected the mixing console to the AC power source.

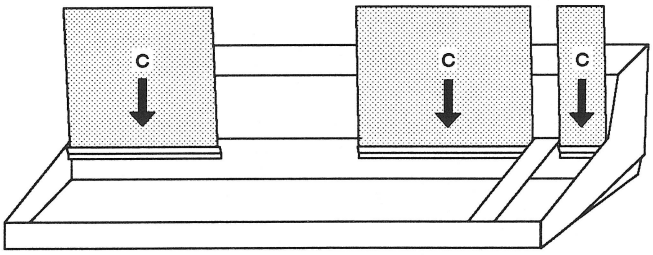

4.2 Measuring instruments

- Digital voltmeter
- AF voltmeter, Rz(in) ≥ 310 kohm
- AF generator, Rs ≤ 200 ohm
- Distortion meter

4.3 General alignment information

Level definitions

Level specifications in dBu

0 dBu corresponds to 0.755 Veff

- The nominal level specifications in dBu are based on a fixed voltage value as the reference.
- The reference value 0.775 V of the relative voltage level in dBu has been derived from the value definition of the absolute voltage level in dBu, however, without being tied to the definition (600 ohm / 1 mW).

Nominal level = studio level at full amplitude

- The nominal level (also referred to as line level) corresponds to the studio level at full amplitude.

Typical nominal levels are:

+6 dBu	=	1.55 Veff
+10 dBu	=	2.45 Veff
+14 dBu	=	3.88 Veff

⚠ **Caution:**

Electrical shock hazard when the equipment is open! Certain parts are energized with line voltage.

The modules supplied by REVOX are factory pre-aligned and consequently require no alignment prior to installation. Recalibration of the mixing console is only necessary after modifications to individual modules have been made. Recalibration in regular intervals is no longer necessary in this equipment generation. The only maintenance required is the occasional demagnetization of the input transformers as described below.

4.4 Demagnetization of the microphone input transformer

- Illegal connection of unbalanced input sources or unintentional ground connection of the "a" and "b" audio wires at the microphone inputs with live phantom supply, drives the input transfomers into saturation and causes permanent magnetization (remanence). This strongly increases the harmonic distortion and produces so-called microphonic noise: even light mechanical tapping of the mixing console causes modulation via the outputs, even if the microphone inputs are switched off.
- Remanence can also accumulate in the transformers after prolonged operation.
- For this reason, all microphone inputs should be periodically demagnetized, and in all cases prior to calibration.

Procedure:

- Switch off the mixing console (to protect the connected speakers).
- At the microphone input feed a frequency of less than 32 Hz from an AF generator via an isolating capacitor.
- **Gradually** increase the input level from 0 V to 3 V.
- **Gradually** decrease the level to 0 V.

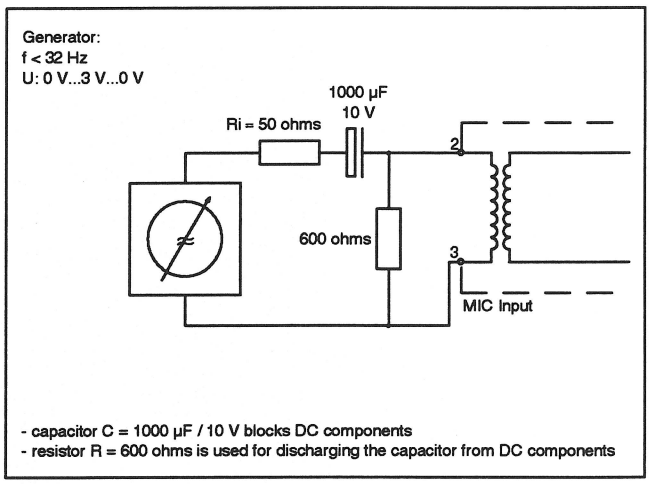

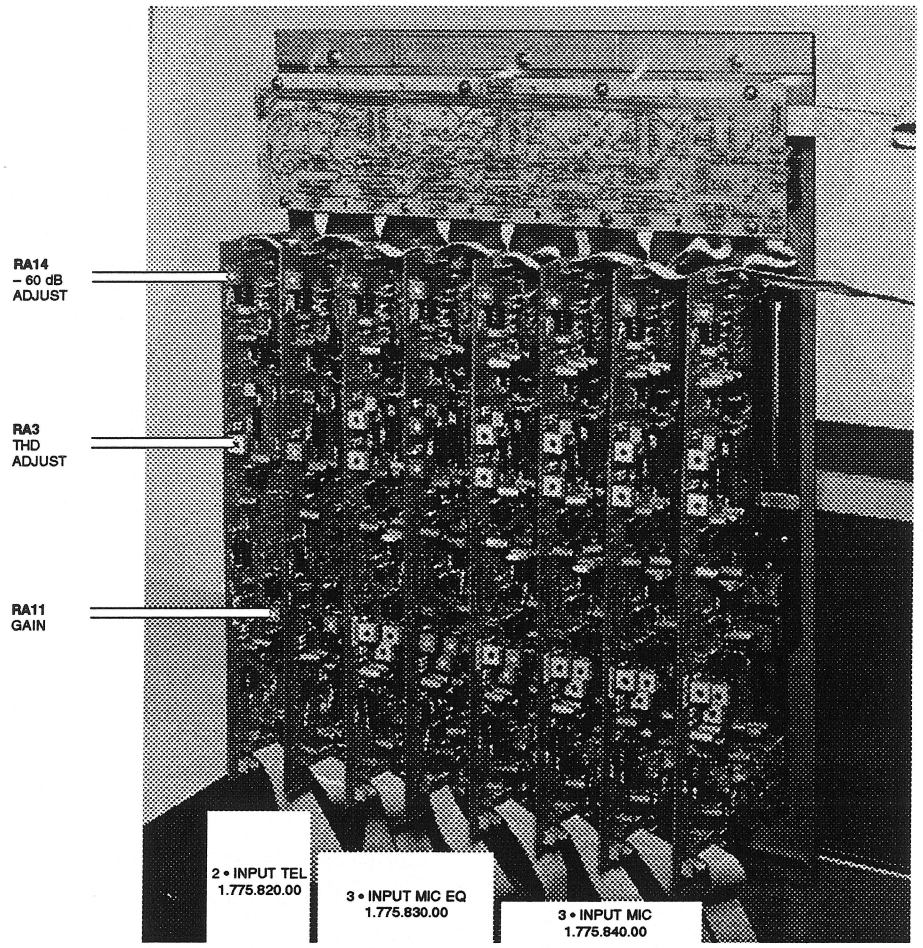
RA14
– 60 dB
ADJUST
RA3
THD
ADJUST
RA11
GAIN
2 • INPUT TEL
1.775.820.00
3 • INPUT MIC EQ
1.775.830.00
3 • INPUT MIC
1.775.840.00

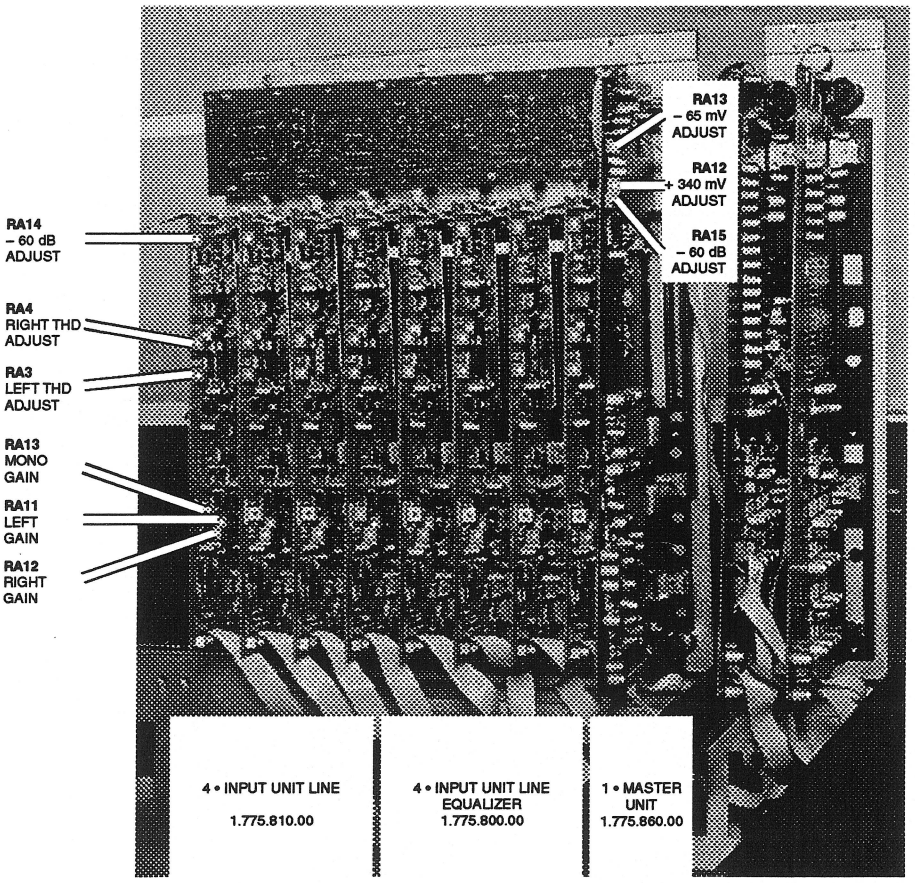
RA13
– 65 mV
ADJUST
RA12
+ 340 mV
ADJUST
RA15
– 60 dB
ADJUST
RA14
– 60 dB
ADJUST
RA4
RIGHT THD
ADJUST
RA3
LEFT THD
ADJUST
RA13
MONO
GAIN
RA11
LEFT
GAIN
RA12
RIGHT
GAIN
4 • INPUT UNIT LINE
1.775.810.00
4 • INPUT UNIT LINE
EQUALIZER
1.775.800.00
1 • MASTER
UNIT
1.775.860.00

4.5 Master unit 1.775.860

4.5.1 Voltage alignment of the fader

- Connect the digital voltmeter to TP1 on the master unit 1.775.860.00 and to 0 V.
- Switch on the console.
- Align the voltage to +340 mV ±1 mV with the trimmer potentiometer RA12.
- Connect the digital voltmeter to TP2 on the master unit 1.775.860.00 and to 0 V.
- Align the voltage to -65 mV ±0.5 mV with the trimmer potentiometer RA13.

4.5.2 Master distortion

- From the audio generator feed 1 kHz/+6 dBu (1.55 Veff) to the unbalanced RETURN L input.
- Connect the AF voltmeter to the TRANSMITTER L output.
- Set the ON AIR switch to the ON position.
- With the RETURN input level control adjust the voltage on the transmitter output to +6 dBu (1.55 Veff).
- Connect the distortion meter to the TRANSMITTER L output.
- With trimmer potentiometer (RA9) align for minimal distortion.
- From the audio generator feed 1 kHz/+6 dBu (1.55 Veff) to the unbalanced input RETURN R.
- Connect the AF voltmeter to the TRANSMITTER R output.
- With trimmer potentiometer (RA10) align for minimum distortion.

4.6 Input units 1.775.800...1.775.840

4.6.1 Input level LINE INPUT 1.775.800/.810

- Set the input selector to the STEREO position.
- Set the input level control to 0 dB (self-holding center position).
- Activate the ON key.
- Set the fader to 0 dB.
- From the audio generator feed 1 kHz/+6 dBu (1.55 Veff) to the balanced LINE L input.
- Connect the AF voltmeter to the TRANSMITTER L output.
- Set the ON AIR switch to the ON position.
- With trimmer potentiometer (RA11) align to +6 dBu (1.55 Veff).
- From the audio generator feed 1 kHz/+6 dBu (1.55 Veff) to the balanced LINE R input.
- Connect the AF voltmeter to the TRANSMITTER R output.
- With trimmer potentiometer (RA12) align to +6 dBu (1.55 Veff).
- Set the input selector to the MONO position.
- With trimmer potentiometer (RA13) align the voltage at the transmitter output to +3 dBu (1.1 Veff).

4.6.2 Input distortion LINE INPUT 1.775.800/.810

- Set the input selector to the STEREO position.
- Set the input level control to 0 dB (self-holding center position).
- Activate the ON key.
- Set the fader to 0 dB.
- From the audio generator feed 1 kHz/+6 dBu (1.55 Veff) to the balanced LINE L input.
- With the output potentiometer align the output voltage on the CR MONITOR L to +6 dB (1.55 Veff) (on the monitor board).
- Connect the distortion meter to the CR MONITOR L output.
- With trimmer potentiometer (RA3) align for minimal distortion.
- From the audio generator feed 1 kHz/+6 dBu (1.55 Veff) to the balanced LINE R input.
- Connect the distortion meter to the CR MONITOR R output.
- With trimmer potentiometer (RA4) align for minimal distortion.

4.6.3 Input level TELEPHONE 1.775.820

- Set the input level control to 0 dB (self-holding center position)
- Activate the ON key.
- Set the fader to 0 dB.
- From the audio generator feed 1 kHz/+6 dBu (1.55 Veff) to the balanced TEL HYB IN input.
- Connect the AF voltmeter to the TRANSMITTER L output.
- Set the ON AIR switch to the ON position.
- With trimmer potentiometer (RA11) align the transmitter output voltage to +6 dBu (1.55 Veff).

4.6.4 Input distortion TELEPHONE 1.775.820.

- Activate the ON key.
- Set the input level control to 0 dB (self-holding center position)
- Set the fader to 0 dB.
- From the audio generator feed 1 kHz/+6 dBu (1.55 Veff) to the balanced TEL HYB IN input.
- With the output potentiometer align the CR MONITOR L output voltage to +6 dB (1.55 Veff) (on the monitor board).
- Connect the distortion meter to the CR MONITOR L output.
- With trimmer potentiometer (RA3) align for minimal distortion.

4.6.5 Input level MIC INPUT 1.775.830/.840

- Plug jumper JP1 to the STEREO position.
- Set the input selector to the LINE position.
- Set the input level control to the self-holding 0 dB position.
- Activate the ON key.
- Set the fader to 0 dB.
- From the audio generator feed 1 kHz/0 dBu (0.775 Veff) to the unbalanced STEREO L input.
- Connect the AF voltmeter to the TRANSMITTER L output.
- Set the ON AIR switch to the ON position.
- With trimmer potentiometer (RA11) align the transmitter output voltage to +6 dBu (1.55 Veff).
- From the audio generator feed 1 kHz/0 dBu (0.775 Veff) to the unbalanced STEREO R input.
- Connect the AF voltmeter to the TRANSMITTER R output.
- With the trimmer potentiometer (RA12) adjust the transmitter output voltage to +6 dBu (1.55 Veff).
- Set jumper JP1 to the LINE position.
- From the audio generator feed 1 kHz/+6 dBu (1.55 Veff) to the balanced LINE input.
- Connect the AF voltmeter to the TRANSMITTER R output.
- With trimmer potentiometer (RA13) align the transmitter output voltage to +6 dBu (1.55 Veff).

4.6.6 Input distortion MIC INPUT 1.775.830/.840

- Plug jumper JP1 to the STEREO position.
- Set the input selector to the LINE position.
- Set the input level control to the self-holding 0 dB position.
- Activate the ON key.
- Set the fader to 0 dB.
- From the audio generator feed 1 kHz/0 dBu (0.775 Veff) to the unbalanced STEREO L input.
- With the output potentiometer align the CR MONITOR L output voltage to +6 dB (1.55 Veff) on the monitor board.
- Connect the AF voltmeter to the CR MONITOR L output.
- With the trimmer potentiometer align for minimal distortion.
- From the audio generator feed 1 kHz/0 dBu (1.55Veff) to the unbalanced STEREO R input.
- Connect the AF voltmeter to the CR MONITOR R output.
- With trimmer potentiometer (RA4) align for minimum distortion.

4.7 Display unit

4.7.1 Level meter, master

- Set the input selector channel 16 to the STEREO position.
- Set the input level control to the self-holding 0 dB position.
- Activate the ON key.
- Set the fader to 0 dB.
- From the audio generator feed 1 kHz/+6 dBu (1.55 Veff) to the balanced STEREO L input.
- Connect the AF voltmeter to the TRANSMITTER L output.
- Set the ON AIR switch to the ON position.
- With the input control align the transmitter output voltage to +6 dBu (1.55 Veff).
- With trimmer potentiometer RA3 (accessible from the front), adjust the left-hand display bar in such a way that the 0 dB LED lights up.
- Align the right-hand bar analogously with RA2.
- The display brightness can be adjusted with RA1.

4.7.2 Level meter, monitor

- Set the input selector channel 16 to the STEREO position.
- Set the input level control to the self-holding 0 dB position.
- Activate the ON key.
- Set the fader to 0 dB.
- From the audio generator feed 1 kHz/+6 dBu (1.55 Veff) to the balanced STEREO L input.
- Connect the AF voltmeter to the CR MONITOR L output.
- Set the ON AIR switch to the ON position.
- On the monitor select press the MASTER key and switch off the PFL AUTO key.
- With the monitor control align the CR MONITOR output voltage to +6 dBu (1.55 Veff).
- With trimmer potentiometer RA3 (accessible from the front), adjust the left-hand display bar in such a way that the 0 dB LED lights up.
- Align the right-hand bar analogously with RA2.
- The display brightness can be adjusted with RA1.

5. Schematic diagrams, pcbs, parts

Content

Abbreviations
MB16 complete 1.775.510.00
Front view
Rear view
Brackets for table mounting 1.775.510.18
Block diagram
Wiring list
D-type connectors 1.775.510.55
- Fader start (1..8), (9..16)
- Talk back from studio
- Remote telephone

Mains transformer 115V / 230V 1.775.700.00
Power supply unit 1.775.720.00
Connection unit 1.775.730.00
Connection unit mic 1.775.740.00
Connection unit master 1.775.750.00
Input unit line - equalizer 1.775.800.00
Input unit line 1.775.810.00
Input unit telephone 1.775.820.00
Input unit mic - equalizer 1.775.830.00
Input unit mic 1.775.840.00
PFL unit 1.775.850.00
Master unit 1.775.860.00
Monitor unit 1.775.870.00
Studio unit 1.775.880.00
Speaker unit 1.775.890.00
Insert unit 1.775.900.00
Talk back unit 1.775.910.00
Display unit 1.775.920.00
Stop watch led 1.775.930.20

Baugruppe (Assembly)	**A**	Assenbly
Antenne	**ANT**	Antenna
Glühlampe	**B**	Bulb
Batterie, Akku	**BA**	Battery, rechargeable battery
Optokoppler (Glühlampe → LDR)	**BR**	Optocupler (bulb → LDR)
Kondensator	**C**	Capacitor
Diode, DIAC	**D**	Diode, DIAC
LED	**DL**	LED
Optokoppler (LED → Fototransistor)	**DLQ**	Optocupler (LED → phototransistor)
Optokoppler (LED → LDR)	**DLR**	Optocopler (LED → LDR)
LED–Array, 7–Segment–Display	**DLZ**	LED–array, 7–segment–display
Fotodiode	**DP**	Photodiode
Gleichrichter	**DZ**	Rectifier
Elektronisches Bauelement	**E**	Electronic component
Kopfhörer	**EF**	Headphones
Sicherung	**F**	Fuse
Filter	**FL**	Filter
Kopf (Ton–, Lösch–)	**H**	Head (audio, erase)
Hybrid–Schaltung (Dick–/Dünnfilm)	**HC**	Hybrid–circuit (thick–/thin–film)
Hallelement	**HE**	Hall–element
Integrierte Schaltung	**IC**	Integrated circuit
Steckbuchse (weiblich)	**J**	Socket (female)
Brückenstecker	**JS**	Jumper
Relais, Schütz	**K**	Relay, contactor
Induktivität	**L**	Inductor
Lautsprecher	**LS**	Loudspeaker
Motor	**M**	Motor
Messwerk	**ME**	Meter
Mikrofon	**MIC**	Microphone
Mechanisches Bauelement	**MP**	Mechanical part
Stecker (männlich)	**P**	Connector (male)
Tonabnehmer	**PU**	Phone cartridge
Transistor, FET, Thyristor, TRIAC	**Q**	Transistor, FET, Thyristor, TRIAC
Fototransistor	**QP**	Phototransistor
Fototransistor–Array	**QPZ**	Phototransistor–array
Widerstand	**R**	Resistor
Lichtempfindlicher Widerstand, **LDR**	**RP**	Light–sensitive resistor, **LDR**
Temperaturabhängiger Widerstand	**RT**	Temperature–dependent resistor
Widerstandsnetzwerk	**RZ**	Resistor network
Schalter	**S**	Switch
Transformator	**T**	Transformer
Verzögerungsleitung	**TL**	Delay line
Testpunkt, –buchse	**TP**	Test point, test socket
Draht, Litze	**W**	Wire, standard wire
Sockel, Halter	**X**	Base, holder
Lampensockel	**XB**	Lamp base
Sicherungshalter	**XF**	Fuse holder
IC–Fassung	**XIC**	IC–socket
Quarz, Piezo–Element	**Y**	Crystal, piezo element
Netzwerk, Array	**Z**	Network, array

MB 16 • BROADCAST

REVOX

PROFESSIONAL SERIES

TEL HYB 1

TEL HYB 2

CR MON CUT

CALL

CALL

HOLD

HOLD

CONFERENCE

TALK BACK

TALK BACK

MASTER

PEAK PROGRAM METER

PFL

L

R

+3 0 -3 -6 -10 -14 -18 -24 -32

dB

MONITOR

PEAK PROGRAM METER

PFL

L

R

+6 +3 0 -3 -6 -10 -14 -18 -24 -32

dB

STOP WATCH

MIN SEC SET

AUTO RESTART

RESET

START STOP

COUNT DOWN

MASTER

MONITOR

VOLUME

TELEPHONE 1

TELEPHONE 2

INPUT

LINE MONO STEREO MIC

0 dB

MIN MAX

GAIN

HF

LF

AUX

PAN BALANCE

+10 0 -10 -20 -30 -40 -50 -60 -70 -00

ON

PFL

INPUT 1

INPUT 2

INPUT 3

INPUT 4

INPUT 5

INPUT 6

INPUT 7

INPUT 8

LINE

INPUT 9

INPUT 10

INPUT 11

INPUT 12

INPUT 13

INPUT 14

INPUT 15

INPUT 16

ON AIR

AUX RETURN

AUX SEND

MASTER

AIR

EXT 1

EXT 2

AUX RETURN

AUX SEND

MASTER

AUTO PFL

MASTER MONITOR

STUDIO MONITOR OFF

VOLUME CR MONITOR

VOLUME STUDIO MONITOR

DISPLAY MONO

VOLUME

MIC TALK BACK

STUDIO

AUX

VOLUME

VOLUME

DJ PHONES

GUEST PHONES

CR MONITOR

STUDIO MONITOR

AC POWER 230V~

POWER

PHANTOM POWER 48V

25-POL D-TYPE

15-POL D-TYPE

25-POL D-TYPE

25-POL D-TYPE

15-POL D-TYPE

SEND RETURN INSERT 8

RETURN SEND INSERT 7

SEND RETURN INSERT 6

RETURN SEND INSERT 5

SEND RETURN INSERT 4

RETURN SEND INSERT 3

REMOTE TELEPHONE

R-STUDIO MONITOR-L

R-CR MONITOR-L

R-MASTER-L TO TRANSMITTER

R-STUDIO PHONES-L

R-AIR-L

R-MASTER-L TO LOGGING

TALK BACK FROM STUDIO

R-EXT 1-L

AUX SEND

R-MASTER-L UNBALANCED

R-EXT 2-L

R-AUX RETURN-L

IN 16 LEFT / RIGHT

IN 15 LEFT / RIGHT

IN 14 LEFT / RIGHT

IN 13 LEFT / RIGHT

IN 12 LEFT / RIGHT

IN 11 LEFT / RIGHT

IN 10 LEFT / RIGHT

IN 9 LEFT / RIGHT

RESTART STOP WATCH

FADER START INPUT 9-16

IN 8 MIC / LINE MONO / R-STEREO-L

IN 7 MIC / LINE MONO / R-STEREO-L

IN 6 MIC / LINE MONO / R-STEREO-L

IN 5 MIC / LINE MONO / R-STEREO-L

IN 4 MIC / LINE MONO / R-STEREO-L

IN 3 MIC / LINE MONO / R-STEREO-L

IN 2 TEL HYB 2 / TO TEL HYB 2

IN 1 TEL HYB 1 / TO TEL HYB 1

RESTART STOP WATCH

CR STUDIO MONITOR CUT

DJ MIC SELECTOR

FADER START INPUT 1-8

ON / OFF

INPUT 16 15 14 13 12 11 10 9

RESTART STOP WATCH

ON / OFF

INPUT 8 7 6 5 4 3 2 1

RESTART STOP WATCH

ON / OFF

INPUT 8 7 6 5 4 3 MC MC

STUDIO

ON / OFF

INPUT 8 7 6 5 4 3 MC MC

CR

MONITOR CUT

ON / OFF

INPUT MC MC 8 7 6 5 4 3

DJ MIC SELECTOR

⓪ NOV-16-90 HA	○ OCT-23-91 HA	○	○
	REVOX MB 16 BROADCAST		PAGE 1 OF 1
REVOX	BACK PANEL		BACK__0P.P01

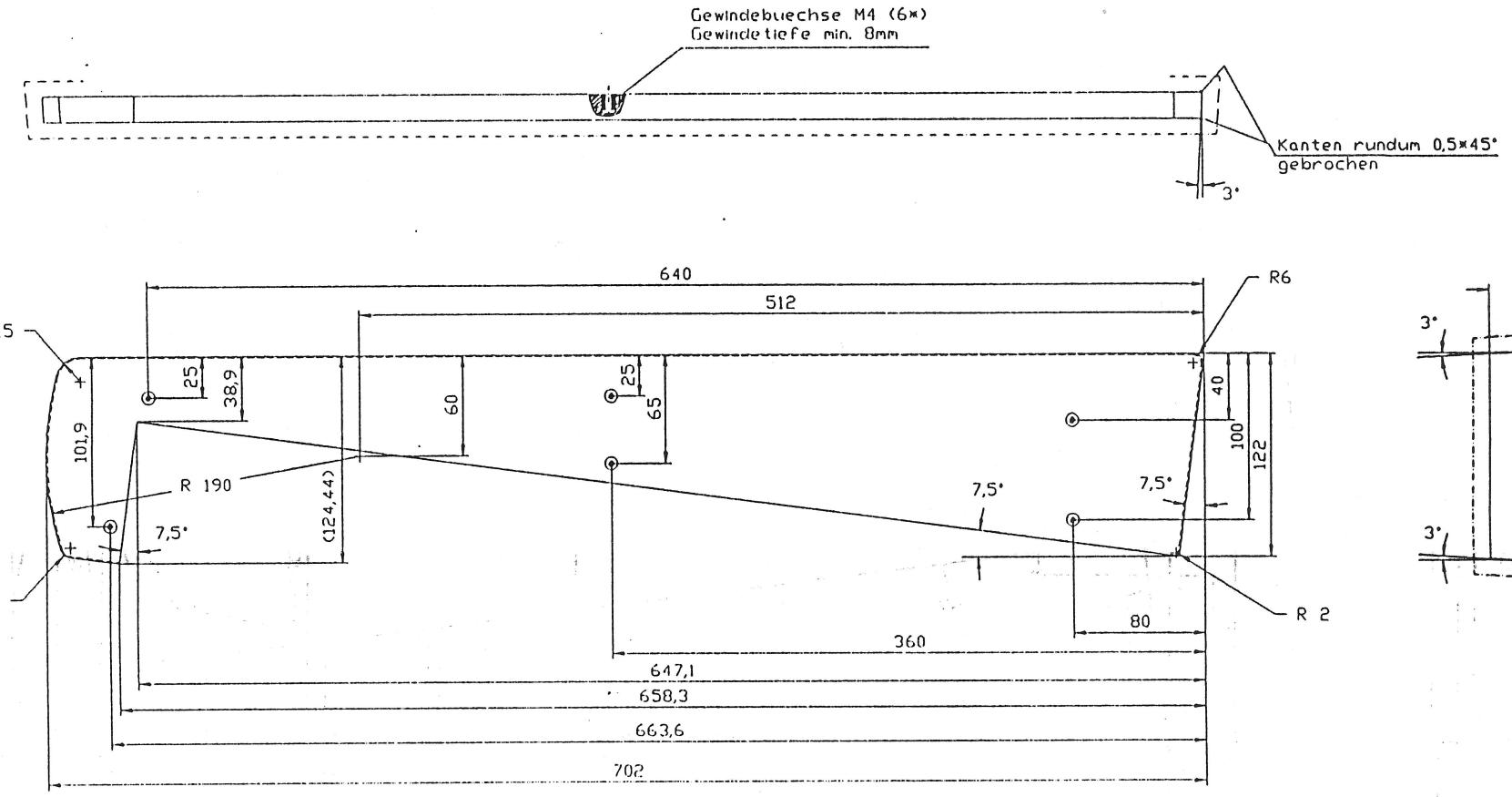

Ausfuehrung: MDF-Platte 16 mm

---------- Sichtflaeche lackiert mit
Schwaab Qualitaet 52-11-9161 HA.Nr. 1/134

Werkstoff: Norm-Nr. / DIN-Bez. / Abmessung	Oberflaeche: Guete / Behr		Aenderung	③ ② ①
Zugehoerige Unterlagen	Freimasstoleranz: ± 0,3	Massstab: 1:2	Ausgb. 24.02.92 Le	⓪
			Datum / Gez. / Gepr. / Ges. / Index	
Ersatz fuer:	Ersetzt durch		Kopie fuer:	
REVOX REGENSDORF ZUERICH	Bezeichnung: Seitenteil links Einbauversion		Nummer: 1.775.510.18	

Vertraulich, Vervielfaeltigung oder Nachdruck nicht gestattet
All rights for translation, adapting or copying reserved
Tous droits, distribution, cession et reproduction reserves
Reproduzione e cessione a terzi vietate

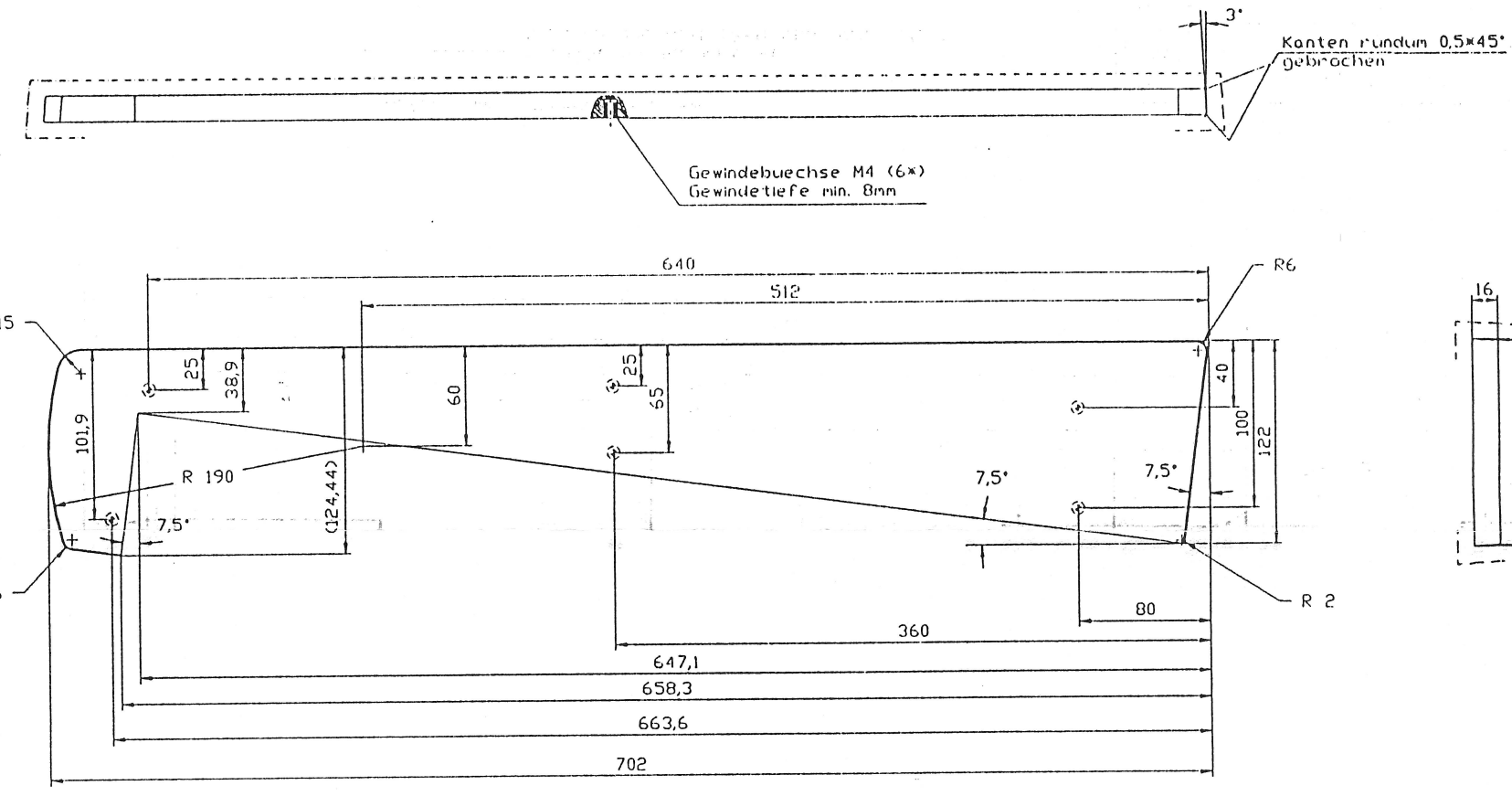

Ausfuehrung: MDF-Platte 16 mm

---------- Sichtflaeche lackiert mit
Schwaab Qualitaet 52-11-9161 HA.Nr. 1/134

Werkstoff: Norm-Nr. / DIN-Bez. / Abmessung	Oberflaeche: Guete / Behr		Aenderung	③ ② ①
Zugehoerige Unterlagen	Freimasstoleranz: ± 0,3	Massstab: 1:2	Ausgb. 24.02.92 Le	⓪
			Datum / Gez. / Gepr. / Ges. / Index	
Ersatz fuer:	Ersetzt durch		Kopie fuer:	
REVOX REGENSDORF ZUERICH	Bezeichnung: Seitenteil rechts Einbauversion		Nummer: 1.775.510.19	

Vertraulich, Vervielfaeltigung oder Nachdruck nicht gestattet
All rights for translation, adapting or copying reserved
Tous droits, distribution, cession et reproduction reserves
Reproduzione e cessione a terzi vietate

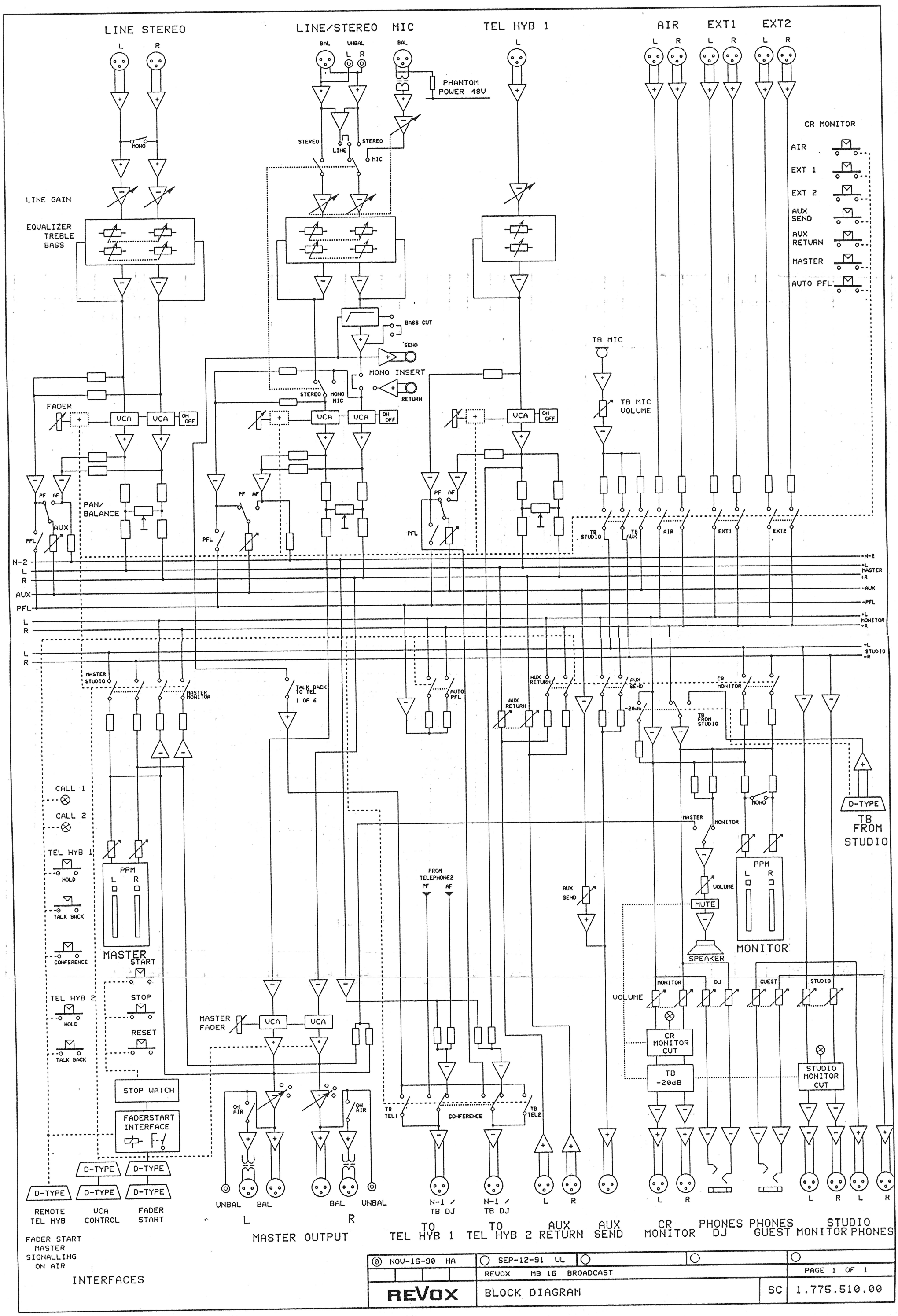

NOV-16-90 HA	SEP-12-91 VL			
	REVOX MB 16 BROADCAST			PAGE 1 OF 1
REVOX	BLOCK DIAGRAM		SC	1.775.510.00

POWER SUPPLY UNIT 1.775.720-00

	J1	J2	J3	J4	J5	J6	J7	J8	J9	J10
	LINE CONNECTOR		STOP WATCH	PFL		MAINS TRANSFORMER			DISPLAY	
1	+48U	0UA	+6UB	-15UA	-15UA	0U	125U	125U	+11U	+11U
2	+48U	0UA	+6UB	0U-S	0U-S	40U	0U	0U	+11U	+11U
3	0U-P	0UA	0U-D	0U-S	0U-S	0U	115U	115U	0U-L	0U-L
4	0U-P	0UA	0U-D	+6UB	0U-S	10U	0U	0U	0U-L	0U-L
5	-15UA	0UA	RSW	+6UB	0U-S	NC	115U	115U	0U-D	0U-D
6	-15UA	0UA	0U-D	-15UB	+6UB	0U			0U-D	0U-D
7	0U-REU	0UA	+6UA	0U-D	+6UB	17U			0U-D	0U-D
8	0U-REU	RSW	+6UA	0U-D	-15UB	17U			0U-D	0U-D
9	-15UB	0UA		0U-D	0U-D				+15UA	+15UB
10	-15UB	0UA		0U-D	0U-D				-15UA	-15UB
11	0U-D			+6UA	0U-D					
12	0U-D			+6UA	0U-D					
13	+6UB				+6UA					
14	+6UB				+6UA					
15	+6UA				+15UA					
16	+6UA				+15UB					
17	+15UB									
18	+15UB									
19	+15UA									
20	+15UA									
	20 PIN	10 PIN	8 PIN	12 PIN	16 PIN	8 PIN	5 PIN	5 PIN	10 PIN	10 PIN

STUDIO UNIT 1.775.880-00

	J1	J2	J3
	MASTER CONNECTION		MONITOR UNIT
1	+15U	0UA	MR
2	+15U	NC	0UA
3	-15U	NC	ML
4	-15U	0UA	0UA
5	SMC	SMR2	0UA
6	TBSON	SMR1	TB-ST-SW
7	TBS	0UA	0UA
8	0U-S	SML1	TB-STUDIO
9	0U-S	SML2	0UA
10	0UA	0UA	0UA
11	SPL1		NC
12	SPL2		0UA
13	0UA		MON R
14	SPR2		0UA
15	SPR1		MON L
16	0UA		0U-A
17			TBS MON
18			0U-A
19			TBS ON/OFF
20			0U-A
	16 PIN	10 PIN	20 PIN

INSERT UNIT 1.775.900-00

	J1
	MIC CONNECTION
1	IS-OUT8
2	IS-IN8
3	0UA
4	IS-IN7
5	IS-OUT7
6	0UA
7	IS-OUT6
8	IS-IN6
9	0UA
10	IS-IN5
11	IS-OUT5
12	0UA
13	IS-OUT4
14	IS-IN4
15	0UA
16	IS-IN3
17	IS-OUT3
18	0UA
19	+15U
20	+15U
	20 PIN

DISPLAY UNIT LED 2x 1.775.920-00

	J1	J2
	MONITOR	POWER SUPPLY
1	PFL-C	+11U
2	0U-S	+11U
3	0U-S	0U-L
4	PPM-L	0U-L
5	0U-S	0U-D
6	PPM-R	0U-D
7	0U-S	0U-D
8	0U-S	0U-D
9		+15UA(B)
10		-15UA(B)
	8 PIN	10 PIN

STOP WATCH LED 1.775.930-20

	J3
	POWER SUPPLY
1	+6UB
2	+6UB
3	0U-D
4	0U-D
5	RSW
6	0U-D
7	+6UA
8	+6UA
	8 PIN

CONNECTION UNIT MIC 1.775.740-00

	J1	J2	J4	W1	W2	W3,5,7	W4,6,8	W9	W10	P3
	LINE CONNECTION		START STOP	TELEPHONE INPUT		MIC INPUT		INSERT	TALKBACK	BACK PANEL
1	+6UA	PFL-C	+6UA	PF-OUT1	PF-OUT2	IS-OUTx	IS-OUTx	IS-OUT8	TB-SW1	R1
2	0U-D	SMC	+6UB	AF-OUT1	AF-OUT2	IS-INx	IS-INx	IS-IN8	TB-SW2	M1
3	0U-D	CRC	0U-D	FS1	FS2	FSx	FSx	0UA	AF-SW	A1
4	+6UB	N-2S	0U-D	-15UA	-15UB	-15UA	-15UB	IS-IN7	PF-SW	R3
5	+6UB	-15UB	SSP1	-15UA	-15UB	-15UA	-15UB	IS-OUT7	+6UA	M3
6	RSW	-15UB	SSP2	+15UA	+15UB	+15UA	+15UB	0UA	+6UA	A3
7	0U-P	+15UB	SSP3	+15UA	+15UB	+15UA	+15UB	IS-OUT6	+6UB	R5
8	0U-P	+15UB	SSP4	TEL IN1	TEL IN2	LINE-Lx	LINE-Lx	IS-IN6	+6UB	M5
9	+48U	0UA	SSP5	0UA	0UA	0UA	0UA	0UA	-15UA	A5
10	+48U	0UA	SSP6	0UA	0UA	0UA	0UA	IS-IN5	0U-D	R7
11		TB-20	SSP7	PFL	PFL	PFL	PFL	IS-OUT5	0U-D	M7
12		0UA	SSP8	PF-IN1	PF-IN2	0UA	0UA	0UA	CRC	A7
13		0U-S		N-2S 1	N-2S 2	0U-S	0U-S	IS-OUT4		NC
14		0U-S		TB-IN1	TB-IN2	LINE-Rx	LINE-Rx	IS-IN4		R2
15		+6UA		0U-S	0U-S	0U-S	0U-S	0UA		M2
16		0UD		AF-IN1	AF-IN2	MICx	MICx	IS-IN3		A2
17		-15UA		TEL OUT1	TEL OUT2			IS-OUT3		R4
18		-15UA		TB-SW1	TB-SW2			0UA		M4
19		+15UA		AF-SW1	AF-SW2			+15U		A4
20		+15UA		PF-SW1	PF-SW2			+15U		R6
21										M6
22										A6
23										R8
24										M8
25										A8
26										NC
										26PIN
	10 PIN	20 PIN	12 PIN	20 PIN	20 PIN	16 PIN	16 PIN	20 PIN	12 PIN	

INPUT UNIT LINE

4x EQUALIZER 1.775.800-00
4x 1.775.810-00

	J1	J2	J3
	MASTER	LINE CONNECTION	PFL
1	-65mV	NC	PFL-ON
2	N-2	NC	PFL-OFF
3	PFL	FS	PFL-C
4	AUX	-15UA(B)	+340mV
5	+340mV	-15UA(B)	F-SEND
6	0U-L	+15UA(B)	F-RETURN
7	0U-L	+15UA(B)	FS
8	ML	LINE-L	NC
9	0U-R	0UA	
10	0U-R	0UA	
11	0U-R	PFL-C	
12	MR	0UA	
13		0U-S	
14		LINE-R	
15		0U-S	
16		NC	
	12 PIN	16 PIN	8 PIN

INPUT UNIT MIC

3x EQUALIZER 1.775.830-00
3x 1.775.840-00

	J1	J2	J3
	MASTER	MIC CONNECTION	PFL
1	-65mV	IS-OUT	PFL-ON
2	N-2	IS-IN	PFL-OFF
3	PFL	FSx	PFL-C
4	AUX	-15UA(B)	+340mV
5	+340mV	-15UA(B)	F-SEND
6	0U-L	+15UA(B)	F-RETURN
7	0U-L	+15UA(B)	FS
8	ML	LINE-L	NC
9	0U-R	0UA	
10	0U-R	0UA	
11	0U-R	PFL	
12	MR	0UA	
13		0U-S	
14		LINE-R	
15		0U-S	
16		MIC	
	12 PIN	16 PIN	8 PIN

PFL UNIT 2x 1.775.850-00

	J1	J2	J3	W1-8
	PFL	POWER SUPPLY	ON/OFF REMOTE	TELEPHONE-LINE- AND MIC-INPUT
1	-15UA	-15UA	REMOTE-1	PFL-ON
2	0U-S	0U-S	REMOTE-2	PFL-OFF
3	0U-S	0U-S	REMOTE-3	PFL-C
4	+6UB	+6UB	REMOTE-4	+340mV
5	+6UB	+6UB	REMOTE-5	FADER-SEND
6	-15UB	-15UB	REMOTE-6	FADER-RETURN
7	0U-D	0U-D	REMOTE-7	FS
8	0U-D	0U-D	REMOTE-8	NC
9	0U-D	0U-D	0U-D	
10	0U-D	0U-D	0U-D	
11	+6UA	+6UA	+6UB	
12	+6UA	+6UA	+6UB	
	12 PIN	12 PIN	12 PIN	8 PIN

TALK BACK UNIT 1.775.910-00

	J1	J2
	BACK PANEL	MIC CONNECTION
1	T1HK1	TB-SW1
2	T1HK2	TB-SW2
3	T2HK1	AF-SW
4	T2HK2	PF-SW
5	T1CK1	+6UA
6	T1CK2	+6UA
7	T2CK1	+6UB
8	T2CK2	+6UB
9	NC	-15UA
10	NC	0U-D
11		0U-D
12		CRC
	10 PIN	12 PIN

CONNECTION UNIT LINE 1.775.730-00

	J1	J2	J3	J4	J6	J7	J8	W1,3,5,7	W2,4,6,8	P5
	MIC CONNECTION		MASTER CONNECT.	START STOP	ONLY FOR 24 CH.	POWER SUPPLY		LINE INPUT		BACK PANEL
1	PFL-C	+6UA	PFL-C	+6UA	+6UA	+48U	0UA	NC	NC	R1
2	SMC	0U-D	SMC	+6UB	0U-D	+48U	0UA	NC	NC	M1
3	CRC	0U-D	CRC	0U-D	0U-D	0U-P	0UA	FSx	FSx	A1
4	N-2S	+6UB	N-2S	0U-D	+6UB	0U-P	0UA	-15UA	-15UB	R3
5	-15UB	+6UB	-15UB	SSP1	+6UB	-15UA	0UA	-15UA	-15UB	M3
6	-15UB	RSW	-15UB	SSP2	RSW	-15UA	0UA	+15UA	+15UB	A3
7	+15UB	0U-P	+15UA	SSP3	0U-P	0U-REU	0UA	+15UA	+15UB	R5
8	+15UB	0U-P	+15UA	SSP4	0U-P	0U-REU	RSW	LINE-Lx	LINE-Lx	M5
9	0UA	+48U	0UA	SSP5	+48U	-15UB	0UA	0UA	0UA	A5
10	0UA	+48U	0UA	SSP6	+48U	-15UB	0UA	0UA	0UA	R7
11	TB-20		TB-20	SSP7		0U-D		PFL-Cx	PFL-Cx	M7
12	0UA		0UA	SSP8		0U-D		0UA	0UA	A7
13	0U-S		0U-S			+6UB		0U-S	0U-S	NC
14	0U-S		0U-S			+6UB		LINE-Rx	LINE-Rx	R2
15	+6UA		+6UA			+6UA		0U-S	0U-S	M2
16	0UD		0UD			+6UA		NC	NC	A2
17	-15UA		-15UB			+15UB				R4
18	-15UA		-15UB			+15UB				M4
19	+15UA		+15UA			+15UA				A4
20	+15UA		+15UA			+15UA				R6
	20 PIN	10 PIN	20 PIN	12 PIN	10 PIN	20 PIN	10 PIN	16 PIN	16 PIN	26PIN

INPUT UNIT TELEPHON 2x 1.775.820-00

	J1	J2	J3
	MASTER	MIC CONNECTION	PFL
1	-65mV	PF-OUT	PFL-ON
2	N-2	AF-OUT	PFL-OFF
3	PFL	FS1	PFL-C
4	AUX	-15UA(B)	+340mV
5	+340mV	-15UA(B)	F-SEND
6	0U-L	+15UA(B)	F-RETURN
7	0U-L	+15UA(B)	FS
8	ML	TEL IN	NC
9	0U-R	0UA	
10	0U-R	0UA	
11	0U-R	PFL	
12	MR	PF-IN	
13		N-2S	
14		TB-IN	
15		0U-S	
16		AF-IN	
17		TEL OUT	
18		TB-SW	
19		AF-SW	
20		PF-SW	
	12 PIN	20 PIN	8 PIN

MASTER UNIT 1.775.860-00

	J1	J2	J3	J4
	MASTER CONNECTION		LINE INPUT	MONITOR
1	-15U	0UA	-65mV	MRM
2	-15U	TTR1	N-2	0UA
3	+15U	TTR2	PFL	MLM
4	+15U	0UA	AUX	0UA
5	+6UA	TTL2	+340mV	0UA
6	0U-D	TTL1	0U-L	PFL
7	0UA	0UA	0U-L	0UA
8	N-2S	MOR	ML	AUXS
9	AUXRR	MOL	0U-R	0UA
10	AUXRL	0UA	0U-R	0UA
11	0UA		0U-R	AUX
12	AS1		MR	0UA
13	AS2			AUXRR
14	0UA			0UA
15	TLL2			AUXRL
16	TLL1			0UA
17	0UA			NC
18	TLR1			0UA
19	TLR2			NC
20	0UA			0UA
	20 PIN	10 PIN	12 PIN	20 PIN

MONITOR UNIT 1.775.870-00

	J1	J2	J3	J4	J5	J6	J7
	MASTER CONNECTION		MASTER	DISPLAY MONITOR	DISPLAY MASTER	STUDIO UNIT	SPEAKER
1	+15U	0UA	MRM	PFL-C	NC	MR	MASTER
2	+15U	AIRL	0UA	0U-S	0U-S	0UA	MONITOR
3	-15U	AIRR	MLM	0U-S	0U-S	ML	0U-A
4	-15U	0UA	0UA	PPM-L	PPM L MA	0UA	+15U
5	CRC	OCR1	0UA	0U-S	0U-S	0UA	+15U
6	PFL-C	OCR3	PFL	PPM-R	PPM R MA	TB-ST-SW	NC
7	TB-20	0UA	0UA	0U-S	0U-S	0UA	NC
8	0U-S	OCL2	AUXS	0U-S	0U-S	TB-STUDIO	-15U
9	0U-S	OCL1	0UA			0UA	-15U
10	0UA	0UA	0UA			0UA	MCR
11	EXT2R		AUX			NC	
12	EXT2L		0UA			0UA	
13	0UA		AUXRR			MON R	
14	EXT1L		0UA			0UA	
15	EXT1R		AUXRL			MON L	
16	0UA		0UA			0U-A	
17			NC			TBS MON	
18			0UA			0U-A	
19			NC			TBS ON/OFF	
20			0UA			0U-A	
	16 PIN	10 PIN	20 PIN	8 PIN	8 PIN	20 PIN	10 PIN

CONNECTION UNIT MASTER 1.775.750-00

	W1	W2	W3	W4	W5	W6	W7	J9
	LINE CONNECT.	MASTER UNIT		MONITOR		STUDIO UNIT		BACK PANEL
1	PFL-C	-15U	0UA	+15U	0UA	+15U	0UA	TBSON
2	SMC	-15U	TTR1	+15U	AIRL	+15U	NC	0U-S
3	CRC	+15U	TTR2	-15U	AIRR	-15U	NC	0UA
4	N-2S	+15U	0UA	-15U	0UA	-15U	0UA	NC
5	-15UB	+6UA	TTL2	CRC	OCR1	SMC	SMR2	NC
6	-15UB	0U-D	TTL1	PFL-C	OCR3	TBSON	SMR1	NC
7	+15UA	0UA	0UA	TB-20	0UA	TBS	0UA	TBS2
8	+15UA	N-2S	MOR	0U-S	OCL2	0U-S	SML1	0UA
9	0UA	AUXRR	MOL	0U-S	OCL1	0U-S	SML2	TBS3
10	0UA	AUXRL	0UA	0UA	0UA	0UA	0UA	NC
11	TB-20	0UA		EXT2R		SPL1		
12	0UA	AS1		EXT2L		SPL2		
13	0U-S	AS2		0UA		0UA		
14	0U-S	0UA		EXT1L		SPR2		
15	+6UA	TLL2		EXT1R		SPR1		
16	0UD	TLL1		0UA		0UA		
17	-15UB	0UA						
18	-15UB	TLR1						
19	+15UA	TLR2						
20	+15UA	0UA						
	20 PIN	20 PIN	10 PIN	16 PIN	10 PIN	16 PIN	10 PIN	10 PIN

SPEAKER UNIT 1.775.890-00

	J7
	SPEAKER
1	MASTER
2	MONITOR
3	0U-A
4	+15U
5	+15U
6	NC
7	NC
8	-15U
9	-15U
10	MCR
	10 PIN

⓪ OCT-08-91 RS	○	○	○	○
	MIXING CONNSOLE MB16			PAGE 1 OF 1
REVOX	WIRING LIST		SC	WIRLST0P.P01

BACK PANEL

FADERSTART 1-8
Connection Unit Mic P3

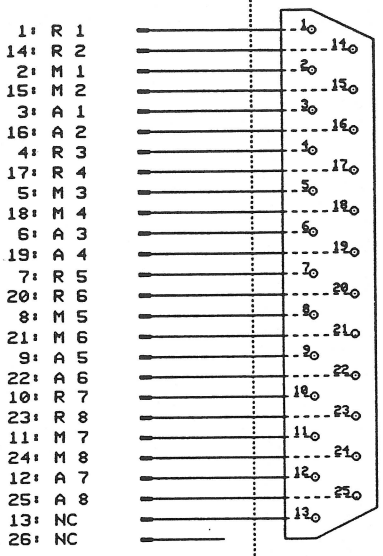

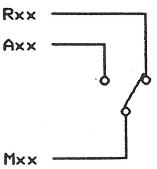

FADERSTART 9-16
Connection Unit Line P5

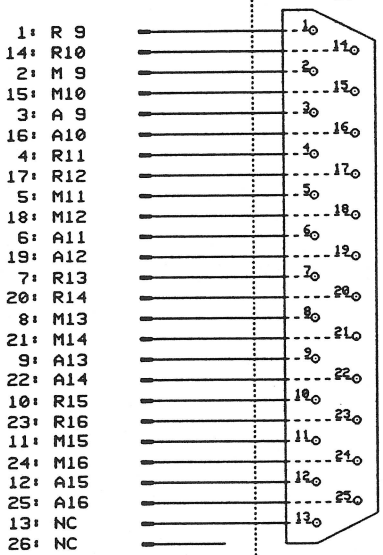

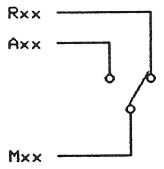

TALKBACK FROM STUDIO
Connection Unit Master J9

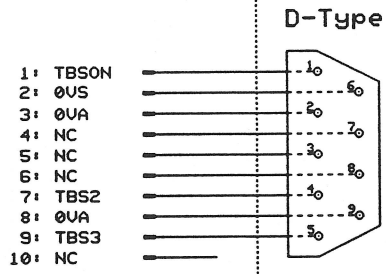

TELEPHONE REMOTE
Talk Back Unit J1

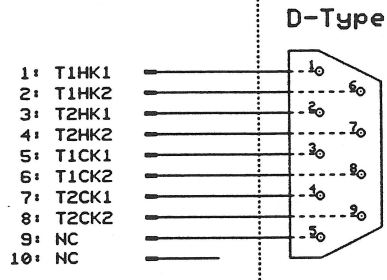

⓪ OCT-28-91 UL	○ FEB-06-92 UL	○	○	○
	MIXING CONSOLE MB16			PAGE 1 OF 1
REVOX	D-TYPE CONNECTOR		SC	1.775.510.55

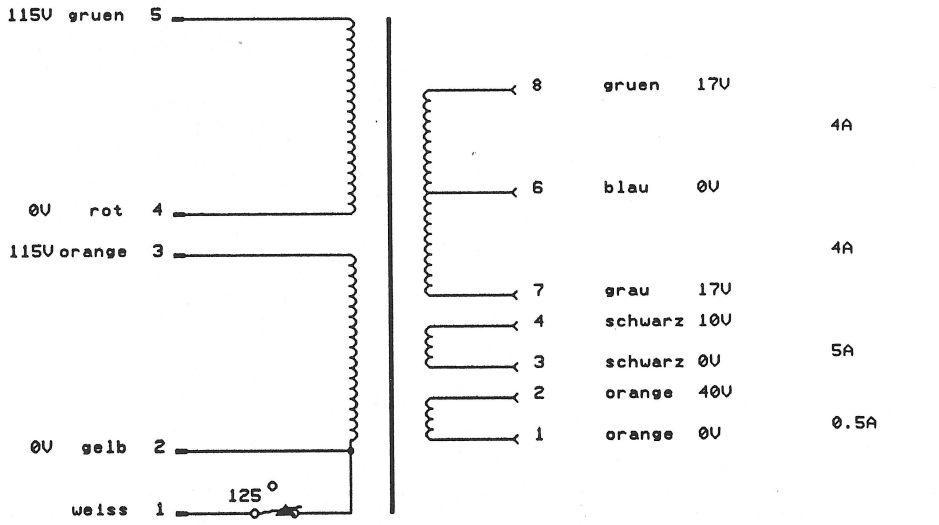

Streuarme Ausfuehrung

Wicklungen auf dem Kern gleichmaessig verteilt,um moeglichst kleines, symmetrisches Streufeld zu erhalten.

Streufeld	:	max. 4A/m in 10cm Abstand allseitig, gemessen mit Stoerfeldmessspule nach DIN 45410. Belastung: primaer Nennspannung, sekundaer gruen - grau mit 150 Ohm belastet.
Frequenz	:	50...60Hz.
Spannungsfestigkeit	:	3kVeff primaer gegen sekundaer. 500Veff Wicklungen untereinander. (IEC-65, Klasse II)
Erwaermung:	:	Bei Nennlast 200VA und 20°C Umgebungstemperatur max 85°C.
Thermoschalter	:	Schaltschwelle 125°+/-5°C.
Gehaeuse	:	Eingegossen in schwarzem Kunststoffbecher.
Anschluesse	:	AWG-Litzen mit AMP MATE-N-LOK gemaess Skizze, Uebergang Draht - Litze im Trafo vergossen.
Beschriftung auf Becherwand	:	Lieferant, Herstelldatum, Pruefspannung mit Kontroll-Visum oder Stempel.

AMP MATE-N-LOK
Stift Nr. 926887-1

Trafo ähnlich Induktor Nr.43634/200VA
mit µ-Metall Schirmring

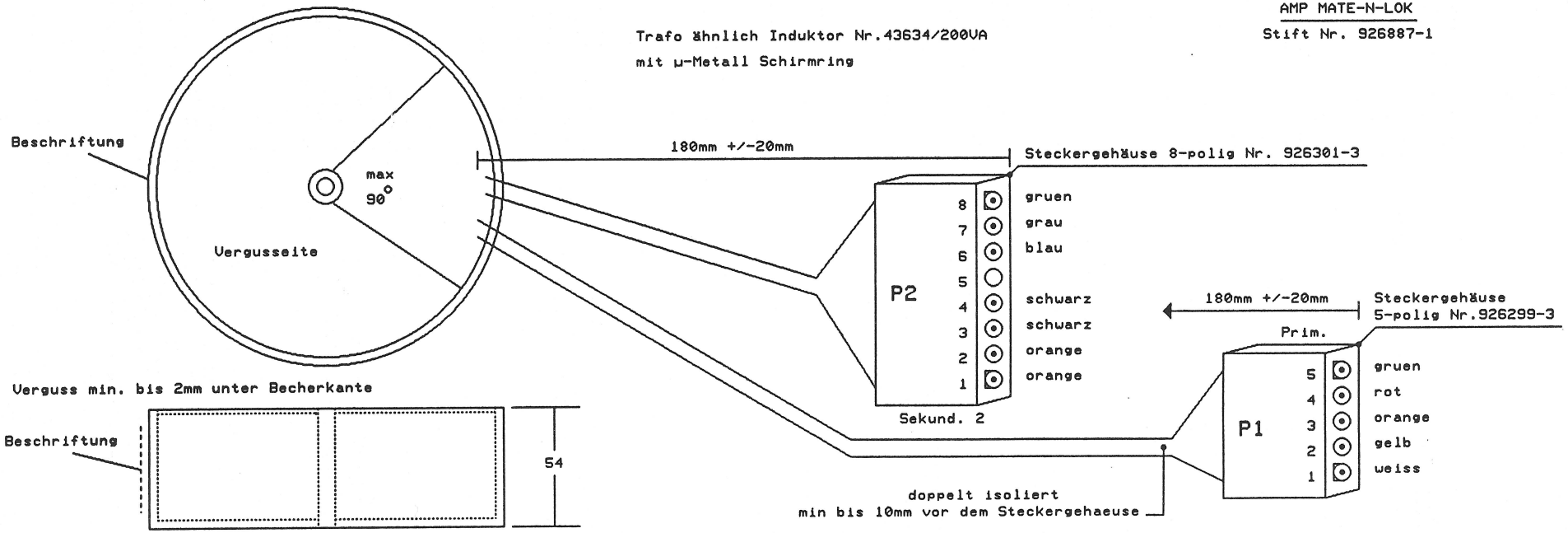

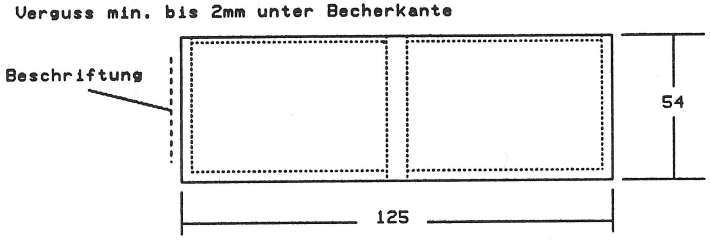

⓪ MAR-19-91 HA	① OKT-04-91 UL			
	MIXING CONSOLE MB16			PAGE 1 OF 1
REVOX	MAINS TRANSFORMER 115/230V		SC	1.775.700.00

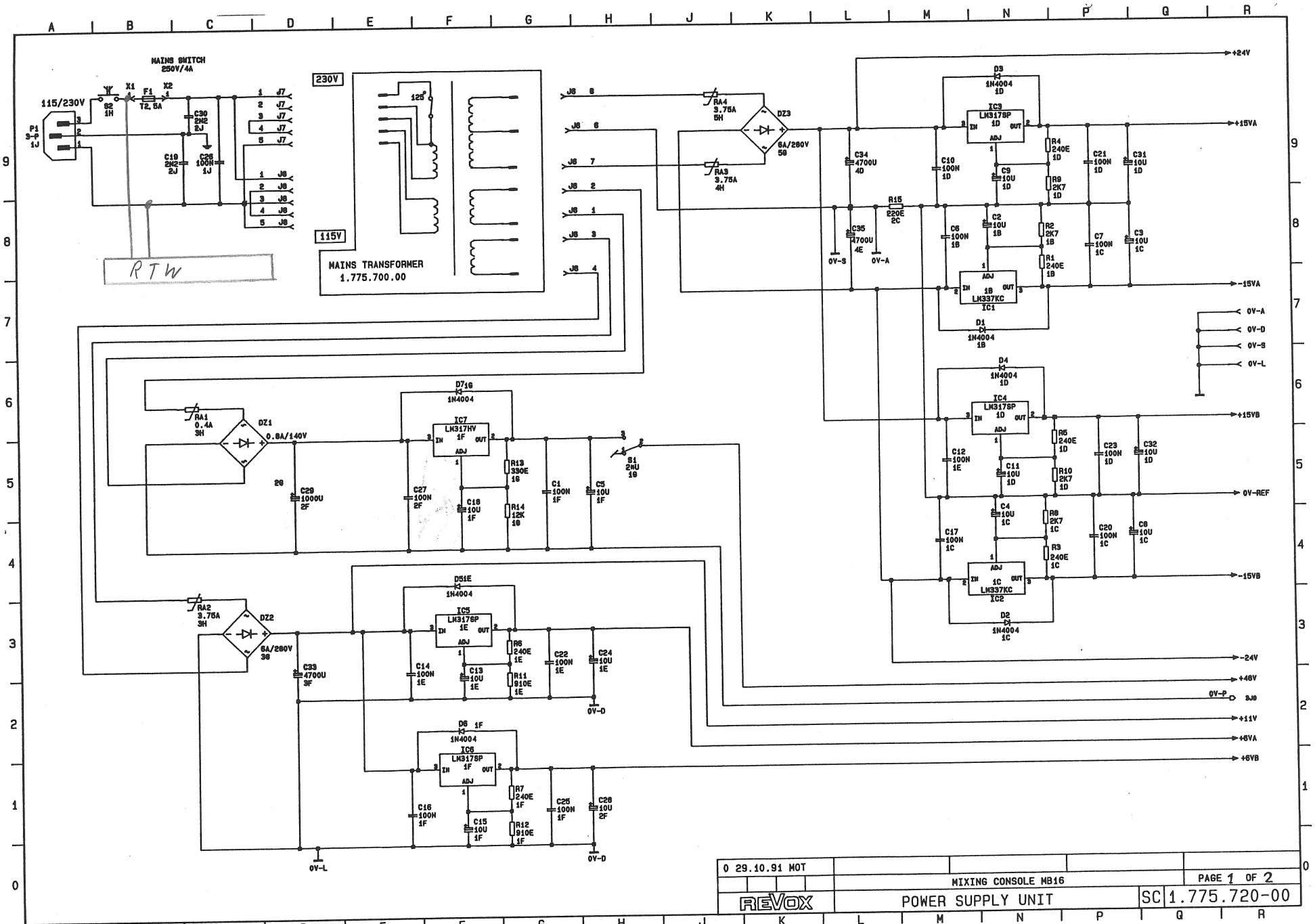

0 29.10.91 MOT			
	MIXING CONSOLE MB16		PAGE 1 OF 2
REVOX	POWER SUPPLY UNIT	SC	1.775.720-00

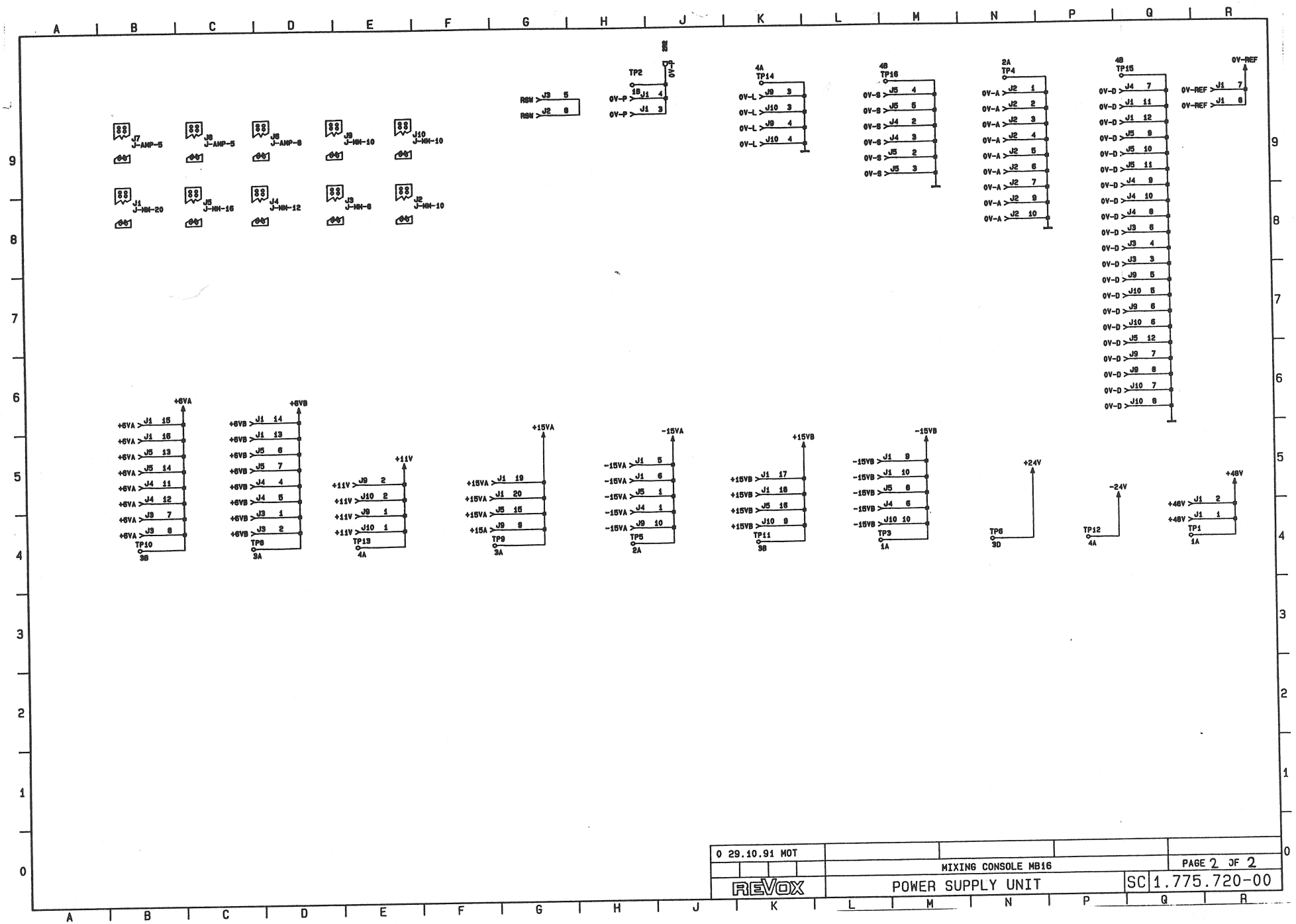

0 29.10.91 MOT				
	MIXING CONSOLE MB16			PAGE 2 OF 2
REVOX	POWER SUPPLY UNIT		SC	1.775.720-00

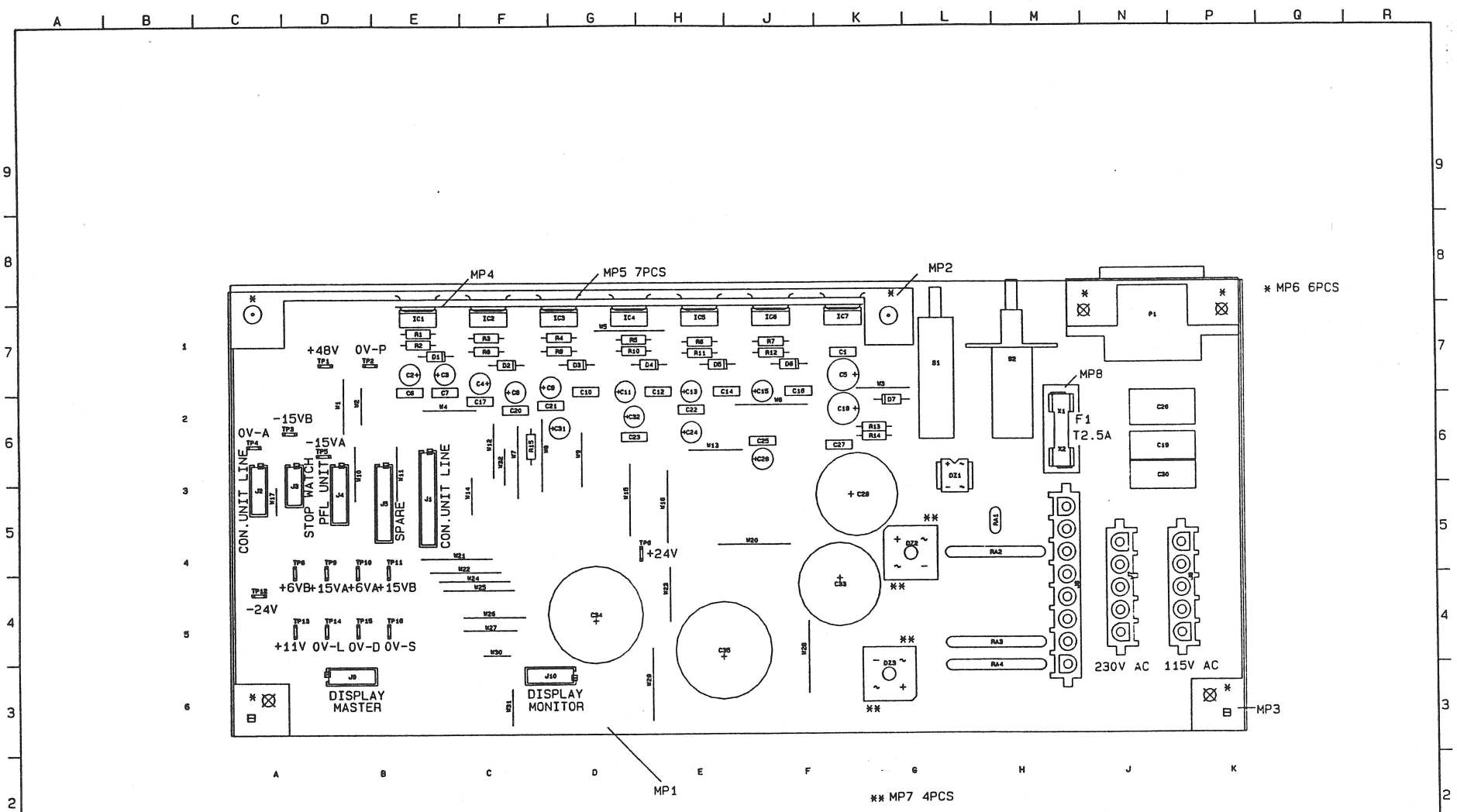

NR. ETIKETTE / ESE-WARNSCHILD
AUFGEKLEBT NACH FABRIKATIONSMUSTER

⓪ 30.08.91 MOT	MIXING CONSOLE MB16	PAGE BP OF
REVOX	POWER SUPPLY UNIT	BP 1.775.720-00

1.775.720.00 POWER SUPPLY

Ad	..Pos..	...Ref.No...	Description			
	C.....1	59.06.0104	100n	10 %,	63V	
	C.....2	59.22.6100	10u	-20/+50 %,	35V	
	C.....3	59.22.6100	10u	-20/+50 %,	35V	
	C.....4	59.22.6100	10u	-20/+50 %,	35V	
	C.....5	59.22.8100	10u	-20/+50 %,	63V	
	C.....6	59.06.0104	100n	10 %,	63V	
	C.....7	59.06.0104	100n	10 %,	63V	
	C.....8	59.22.6100	10u	-20/+50 %,	35V	
	C.....9	59.22.6100	10u	-20/+50 %,	35V	
	C....10	59.06.0104	100n	10 %,	63V	
	C....11	59.22.6100	10u	-20/+50 %,	35V	
	C....12	59.06.0104	100n	10 %,	63V	
	C....13	59.22.6100	10u	-20/+50 %,	35V	
	C....14	59.06.0104	100n	10 %,	63V	
	C....15	59.22.6100	10u	-20/+50 %,	35V	
	C....16	59.06.0104	100n	10 %,	63V	
	C....17	59.06.0104	100n	10 %,	63V	
	C....18	59.22.8100	10u	-20/+50 %,	63V	
	C....19	59.14.3222	2n2	20 %,	440V	
	C....20	59.06.0104	100n	10 %,	63V	
	C....21	59.06.0104	100n	10 %,	63V	
	C....22	59.06.0104	100n	10 %,	63V	
	C....23	59.06.0104	100n	10 %,	63V	
	C....24	59.22.6100	10u	-20/+50 %,	35V	
	C....25	59.06.0104	100n	10 %,	63V	
	C....26	59.14.3104	100n	20 %,	300V	
	C....27	59.06.0104	100n	10 %,	63V	
	C....28	59.22.6100	10u	-20/+50 %,	35V	
	C....29	59.22.8102	1000u	-20/+50 %,	63V	
	C....30	59.14.3222	2n2	20 %,	440V	
	C....31	59.22.6100	10u	-20/+50 %,	35V	
	C....32	59.22.6100	10u	-20/+50 %,	35V	
	C....33	59.22.4472	4700u	-20/+50 %,	16V	
	C....34	59.22.6472	4700u	-20/+50 %,	40V	
	C....35	59.22.6472	4700u	-20/+50 %,	40V	
	D.....1	50.04.0105	1N4004	D041,RECTIFIER		
	D.....2	50.04.0105	1N4004	D041,RECTIFIER		
	D.....3	50.04.0105	1N4004	D041,RECTIFIER		
	D.....4	50.04.0105	1N4004	D041,RECTIFIER		
	D.....5	50.04.0105	1N4004	D041,RECTIFIER		
	D.....6	50.04.0105	1N4004	D041,RECTIFIER		
	D.....7	50.04.0105	1N4004	D041,RECTIFIER		
	DZ....1	70.01.0216	0.8A	140V,DIP06, BRIDGE RECTIFIER		
	DZ....2	70.01.0227	6A	400V,BRIDGE RECTIFIER		
01	F.....1	51.01.0121	2.5AT	Fuse		
	IC....1	50.10.0105	LM337KC	TO220-9,SERIE REG. -1		
	IC....1	50.10.0105	LM337KC	TO220-9,SERIE REG. -1		
	IC....2	50.10.0105	LM337KC	TO220-9,SERIE REG. -1		
	IC....3	50.10.0104	LM317SP	TO220,SERIE-REG. +1		
	IC....4	50.10.0104	LM317SP	TO220,SERIE-REG. +1		
	IC....5	50.10.0104	LM317SP	TO220,SERIE-REG. +1		
	IC....6	50.10.0104	LM317SP	TO220,SERIE-REG. +1		
	IC....7	50.10.0116	LM317HV	TO220-8,VOLTAGE REG.+1		
	J.....1	54.14.5520	20-P	VERT,	FEM., J-MICRO-MATCH	
	J.....2	54.14.5510	10-P	VERT,	FEM., J-MICRO-MATCH	
	J.....3	54.14.5508	8-P	VERT,	FEM., J-MICRO-MATCH	
	J.....4	54.14.5512	12-P	VERT,	FEM., J-MICRO-MATCH	
	J.....5	54.14.5516	16-P	VERT,	FEM., J-MICRO-MATCH	
	J.....6	54.25.0008	8-P	12A,	FEM., J-AMP, VERTICAL	
	J.....7	54.25.0005	5-P	12A,	FEM., J-AMP, VERTICAL	
	J.....8	54.25.0005	5-P	12A,	FEM., J-AMP, VERTICAL	
	J.....9	54.14.5510	10-P	VERT,	FEM., J-MICRO-MATCH	
	J....10	54.14.5510	10-P	VERT,	FEM., J-MICRO-MATCH	
	P.....1	54.42.0020	3-P	ANG.,	MALE, MAINS CONNECTOR	
	MP....1	1.775.720.11		POWER SUPPLY UNIT PCB		
01	MP....1	1.775.720.12		POWER SUPPLY UNIT PCB		
	MP....2	1.775.720.02		HEAT SINK		
	MP....3	1.775.720.05		HOLDER		
	MP....4	1.775.720.03		INSULATION		
	MP....5	50.20.2003	7 pcs	CLIP		
	MP....6	21.38.0354	6 pcs	SCREW		
	MP....7	28.21.1360	4 pcs	TUBULAR RIVETS		
	MP....8	51.99.0128		FUSE PROTECTION		
	R.....1	57.11.3241	240E	1 %,	0.6W,	MF
	R.....2	57.11.3272	2k7	1 %,	0.6W,	MF
	R.....3	57.11.3241	240E	1 %,	0.6W,	MF
	R.....4	57.11.3241	240E	1 %,	0.6W,	MF
	R.....5	57.11.3241	240E	1 %,	0.6W,	MF
	R.....6	57.11.3241	240E	1 %,	0.6W,	MF
	R.....7	57.11.3241	240E	1 %,	0.6W,	MF
	R.....8	57.11.3272	2k7	1 %,	0.6W,	MF
	R.....9	57.11.3272	2k7	1 %,	0.6W,	MF
	R....10	57.11.3272	2k7	1 %,	0.6W,	MF
	R....11	57.11.3911	910E	1 %,	0.6W,	MF
	R....12	57.11.3911	910E	1 %,	0.6W,	MF
	R....13	57.11.3241	240E	1 %,	0.6W,	MF
01	R....13	57.11.3331	330E	1 %,	0.6W,	MF
	R....14	57.11.3912	9k1	1 %,	0.6W,	MF
01	R....14	57.11.3123	12k	1 %,	0.6W,	MF
	R....15	57.11.3221	220E	1 %,	0.6W,	MF
	RA....1	57.92.7019	0.4A	60V,	R-PTC	
	RA....2	57.92.7018	3.75A	50V,	R-PTC	
	RA....3	57.92.7018	3.75A	50V,	R-PTC	
	RA....4	57.92.7018	3.75A	50V,	R-PTC	
	S.....1	55.15.0109	2*U	PUSH BUTTON SWITCH		
	S.....2	55.03.0286	1*A	MAINS SWITCH		
	TP....1	54.02.0320	1-P	STR.,	MALE, FLATPIN 2.8*0.8	
	TP....2	54.02.0320	1-P	STR.,	MALE, FLATPIN 2.8*0.8	
	TP....3	54.02.0320	1-P	STR.,	MALE, FLATPIN 2.8*0.8	
	TP....4	54.02.0320	1-P	STR.,	MALE, FLATPIN 2.8*0.8	
	TP....5	54.02.0320	1-P	STR.,	MALE, FLATPIN 2.8*0.8	
	TP....6	54.02.0320	1-P	STR.,	MALE, FLATPIN 2.8*0.8	
	TP....8	54.02.0320	1-P	STR.,	MALE, FLATPIN 2.8*0.8	
	TP....9	54.02.0320	1-P	STR.,	MALE, FLATPIN 2.8*0.8	
	TP...10	54.02.0320	1-P	STR.,	MALE, FLATPIN 2.8*0.8	
	TP...11	54.02.0320	1-P	STR.,	MALE, FLATPIN 2.8*0.8	
	TP...12	54.02.0320	1-P	STR.,	MALE, FLATPIN 2.8*0.8	
	TP...13	54.02.0320	1-P	STR.,	MALE, FLATPIN 2.8*0.8	
	TP...14	54.02.0320	1-P	STR.,	MALE, FLATPIN 2.8*0.8	
	TP...15	54.02.0320	1-P	STR.,	MALE, FLATPIN 2.8*0.8	
	TP...16	54.02.0320	1-P	STR.,	MALE, FLATPIN 2.8*0.8	
	W.....1	64.01.0106	15.24mm	0.60MM, WIRE BRIDGE		
	W.....2	64.01.0106	10.60mm	0.60MM, WIRE BRIDGE		
	W.....3	64.01.0106	15.24mm	0.60MM, WIRE BRIDGE		
	W.....4	64.01.0106	15.24mm	0.60MM, WIRE BRIDGE		
	W.....5	64.01.0106	20.32mm	0.60MM, WIRE BRIDGE		
	W.....6	64.01.0106	20.32mm	0.60MM, WIRE BRIDGE		
	W.....7	64.01.0106	20.32mm	0.60MM, WIRE BRIDGE		
	W.....8	64.01.0106	20.32mm	0.60MM, WIRE BRIDGE		
	W.....9	64.01.0106	15.24mm	0.60MM, WIRE BRIDGE		
	W....10	64.01.0106	15.24mm	0.60MM, WIRE BRIDGE		
	W....11	64.01.0106	15.24mm	0.60MM, WIRE BRIDGE		
	W....12	64.01.0106	15.24mm	0.60MM, WIRE BRIDGE		
	W....13	64.01.0106	15.24mm	0.60MM, WIRE BRIDGE		
	W....14	64.01.0106	10.60mm	0.60MM, WIRE BRIDGE		
	W....15	64.01.0106	20.32mm	0.60MM, WIRE BRIDGE		
	W....16	64.01.0106	20.32mm	0.60MM, WIRE BRIDGE		
	W....17	64.01.0106	7.62mm	0.60MM, WIRE BRIDGE		
	W....20	64.01.0106	20.32mm	0.60MM, WIRE BRIDGE		
	W....21	64.01.0106	20.32mm	0.60MM, WIRE BRIDGE		
	W....22	64.01.0106	20.32mm	0.60MM, WIRE BRIDGE		
	W....23	64.01.0106	15.24mm	0.60MM, WIRE BRIDGE		
	W....24	64.01.0106	20.32mm	0.60MM, WIRE BRIDGE		
	W....25	64.01.0106	20.32mm	0.60MM, WIRE BRIDGE		
	W....26	64.01.0108	17.78mm	0.80MM, WIRE BRIDGE		
	W....27	64.01.0106	15.24mm	0.60MM, WIRE BRIDGE		
	W....28	64.01.0106	20.32mm	0.60MM, WIRE BRIDGE		
	W....29	64.01.0106	20.32mm	0.60MM, WIRE BRIDGE		
	W....30	64.01.0106	7.62mm	0.60MM, WIRE BRIDGE		
	W....31	64.01.0106	10.60mm	0.60MM, WIRE BRIDGE		
	W....32	64.01.0106	10.60mm	0.60MM, WIRE BRIDGE		
	X.....1	53.03.0142		FUSE-CLIP		
	X.....2	53.03.0142		FUSE-CLIP		

00 KG 91/08/30
01 UL 91/11/04

EL=Electrolytic,C=Ceramic, PETP=Polyester

MF=Metal Film

MANUFACTURER: dbx=dbx Incorparated,NS=National Semiconductor,Mot=Motorola
RA=Raytheon,SIG=Signetics,TI=Texas Instruments

END

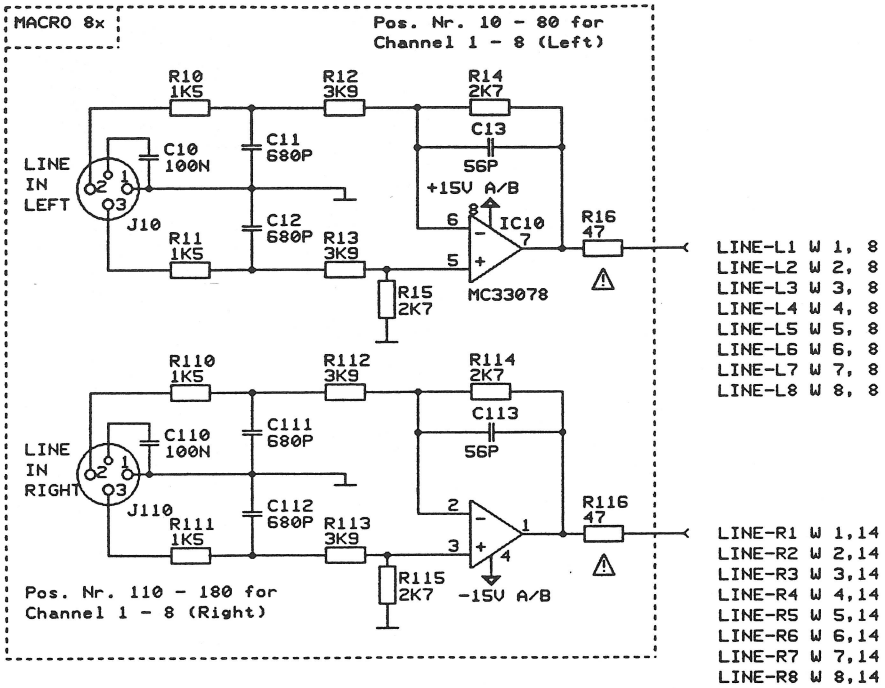

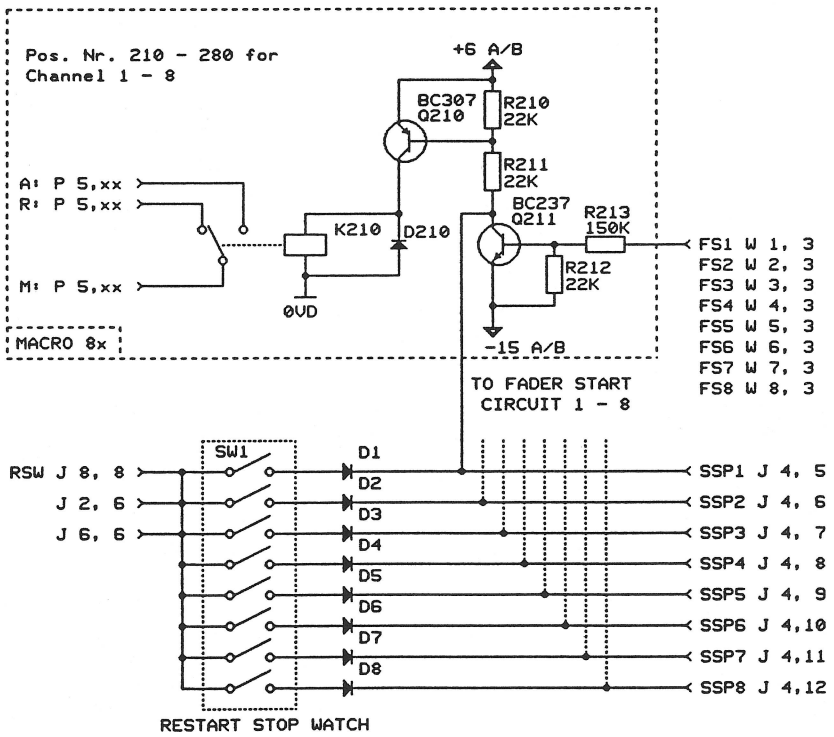

P5

R1:	1
M1:	2
A1:	3
R2:	14
M2:	15
A3:	16
R3:	4
M3:	5
A3:	6
R4:	17
M4:	18
A4:	19
R5:	7
M5:	8
A5:	9
R6:	20
M6:	21
A6:	22
R7:	10
M7:	11
A7:	12
R8:	23
M8:	24
A8:	25
NC	13
NC	16

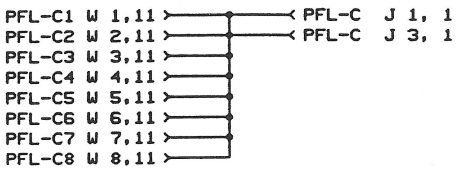

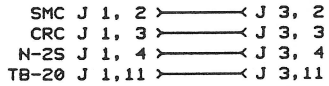

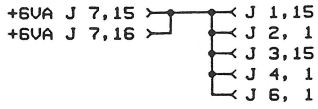

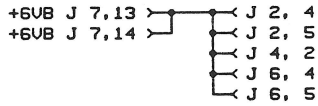

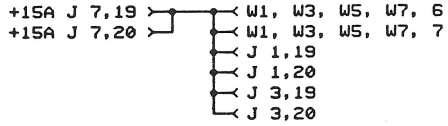

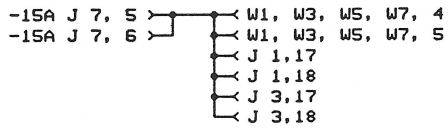

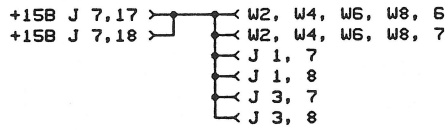

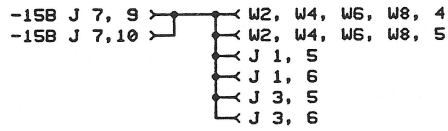

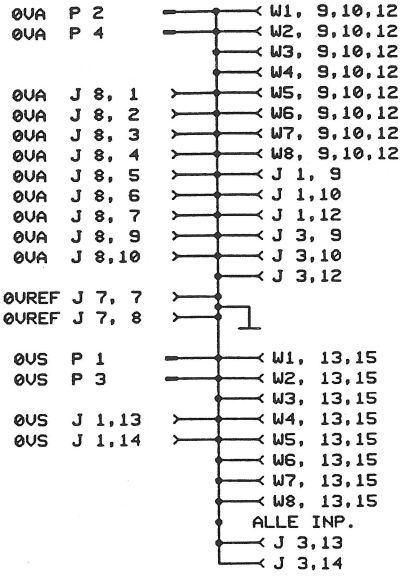

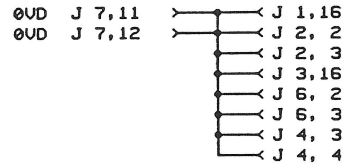

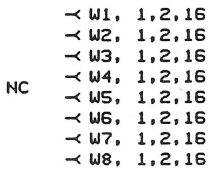

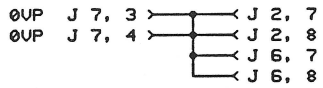

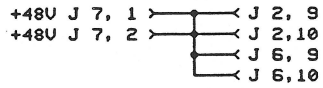

⓪ JUN-28-91 A.T.	○ SEP-12-91 UL	○	○	○
	MIXING CONSOLE MB16			PAGE 1 OF 1
REVOX	CONNECTION UNIT LINE		SC	1.775.730.00

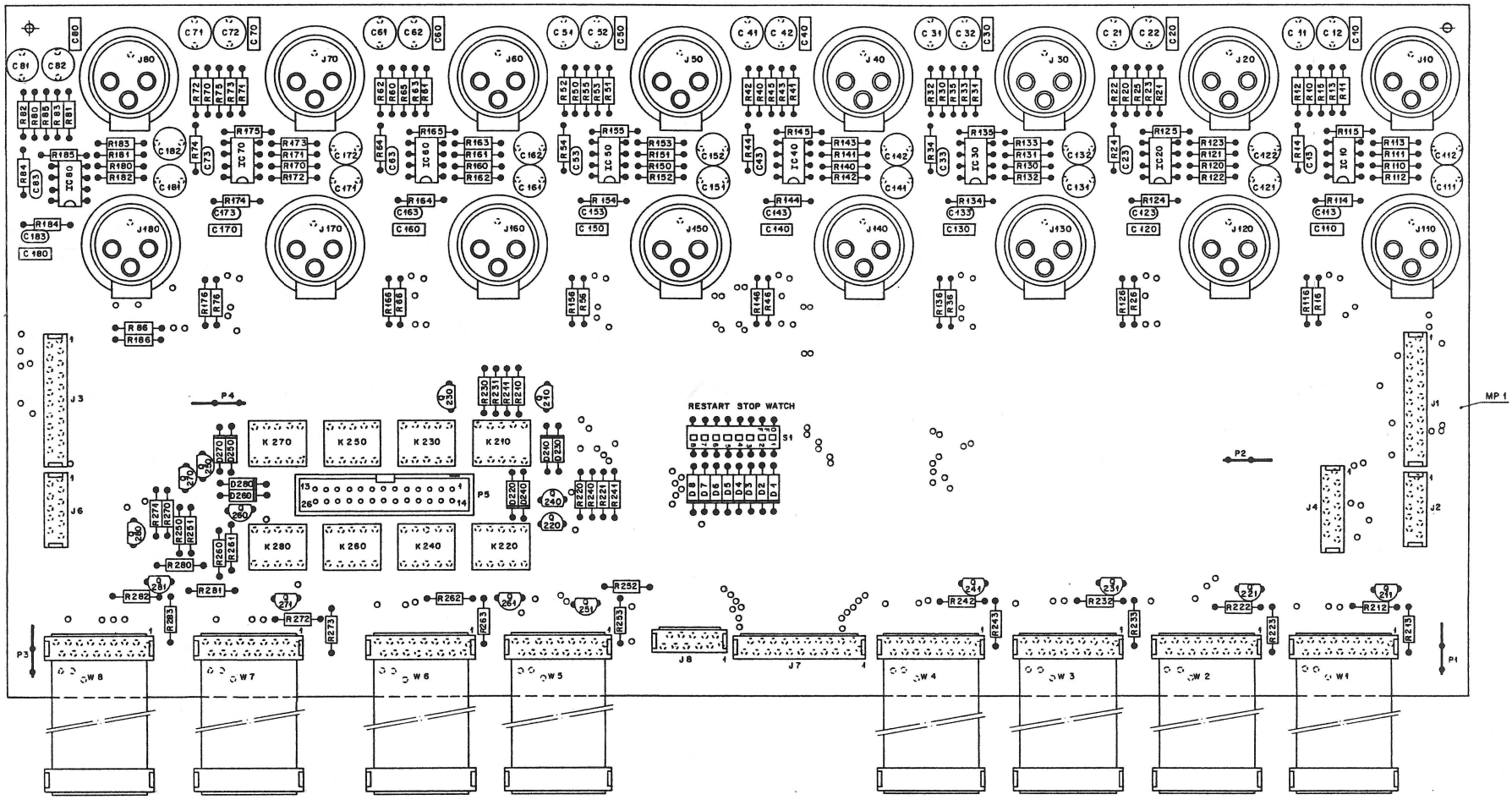

Nr. Etikette / ESE - Warnschild
aufgeklebt nach Fabrikationsmuster.

Werkstoff	Norm-Nr.:	Güte:	Oberfläche		Änderung
	DIN-Bez.:	Beh.:			
	Abmessung:				
Zugehörige Unterlagen: PL		Freimassetoleranz: ±	Maßstab: 2 : 1	Ausgabe 29.6.91	
Ersatz für:		Ersetzt durch:		Kopie für:	

STUDER REGENSDORF ZÜRICH

Benennung: CONNECTION UNIT LINE ESE

Nummer: 1.775.730-00

1.775.730.00 CONNECTION UNIT LINE

Ad	..Pos..	...Ref.No...	Description			
	C....10	59.06.0104	100 nF	10%, 25V,	PETP	
	C....11	59.05.1681	680 pF	1%, 25V,	C	
	C....12	59.05.1681	680 pF	1%, 25V,	C	
	C....13	59.34.4560	56 pF	5%, 25V,	C	
	C....20	59.06.0104	100 nF	10%, 25V,	PETP	
	C....21	59.05.1681	680 pF	1%, 25V,	C	
	C....22	59.05.1681	680 pF	1%, 25V,	C	
	C....23	59.34.4560	56 pF	5%, 25V,	C	
	C....30	59.06.0104	100 nF	10%, 25V,	PETP	
	C....31	59.05.1681	680 pF	1%, 25V,	C	
	C....32	59.05.1681	680 pF	1%, 25V,	C	
	C....33	59.34.4560	56 pF	5%, 25V,	C	
	C....40	59.06.0104	100 nF	10%, 25V,	PETP	
	C....41	59.05.1681	680 pF	1%, 25V,	C	
	C....42	59.05.1681	680 pF	1%, 25V,	C	
	C....43	59.34.4560	56 pF	5%, 25V,	C	
	C....50	59.06.0104	100 nF	10%, 25V,	PETP	
	C....51	59.05.1681	680 pF	1%, 25V,	C	
	C....52	59.05.1681	680 pF	1%, 25V,	C	
	C....53	59.34.4560	56 pF	5%, 25V,	C	
	C....60	59.06.0104	100 nF	10%, 25V,	PETP	
	C....61	59.05.1681	680 pF	1%, 25V,	C	
	C....62	59.05.1681	680 pF	1%, 25V,	C	
	C....63	59.34.4560	56 pF	5%, 25V,	C	
	C....70	59.06.0104	100 nF	10%, 25V,	PETP	
	C....71	59.05.1681	680 pF	1%, 25V,	C	
	C....72	59.05.1681	680 pF	1%, 25V,	C	
	C....73	59.34.4560	56 pF	5%, 25V,	C	
	C....80	59.06.0104	100 nF	10%, 25V,	PETP	
	C....81	59.05.1681	680 pF	1%, 25V,	C	
	C....82	59.05.1681	680 pF	1%, 25V,	C	
	C....83	59.34.4560	56 pF	5%, 25V,	C	
	C...110	59.06.0104	100 nF	10%, 25V,	PETP	
	C...111	59.05.1681	680 pF	1%, 25V,	C	
	C...112	59.05.1681	680 pF	1%, 25V,	C	
	C...113	59.34.4560	56 pF	5%, 25V,	C	
	C...120	59.06.0104	100 nF	10%, 25V,	PETP	
	C...121	59.05.1681	680 pF	1%, 25V,	C	
	C...122	59.05.1681	680 pF	1%, 25V,	C	
	C...123	59.34.4560	56 pF	5%, 25V,	C	
	C...130	59.06.0104	100 nF	10%, 25V,	PETP	
	C...131	59.05.1681	680 pF	1%, 25V,	C	
	C...132	59.05.1681	680 pF	1%, 25V,	C	
	C...133	59.34.4560	56 pF	5%, 25V,	C	
	C...140	59.06.0104	100 nF	10%, 25V,	PETP	
	C...141	59.05.1681	680 pF	1%, 25V,	C	
	C...142	59.05.1681	680 pF	1%, 25V,	C	
	C...143	59.34.4560	56 pF	5%, 25V,	C	
	C...150	59.06.0104	100 nF	10%, 25V,	PETP	
	C...151	59.05.1681	680 pF	1%, 25V,	C	
	C...152	59.05.1681	680 pF	1%, 25V,	C	
	C...153	59.34.4560	56 pF	5%, 25V,	C	
	C...160	59.06.0104	100 nF	10%, 25V,	PETP	
	C...161	59.05.1681	680 pF	1%, 25V,	C	
	C...162	59.05.1681	680 pF	1%, 25V,	C	
	C...163	59.34.4560	56 pF	5%, 25V,	C	
	C...170	59.06.0104	100 nF	10%, 25V,	PETP	
	C...171	59.05.1681	680 pF	1%, 25V,	C	
	C...172	59.05.1681	680 pF	1%, 25V,	C	
	C...173	59.34.4560	56 pF	5%, 25V,	C	
	C...180	59.06.0104	100 nF	10%, 25V,	PETP	
	C...181	59.05.1681	680 pF	1%, 25V,	C	
	C...182	59.05.1681	680 pF	1%, 25V,	C	
	C...183	59.34.4560	56 pF	5%, 25V,	C	
	D.....1	50.04.0125	1N4448	Diode		
	D.....2	50.04.0125	1N4448	Diode		
	D.....3	50.04.0125	1N4448	Diode		
	D.....4	50.04.0125	1N4448	Diode		
	D.....5	50.04.0125	1N4448	Diode		
	D.....6	50.04.0125	1N4448	Diode		
	D.....7	50.04.0125	1N4448	Diode		
	D.....8	50.04.0125	1N4448	Diode		
	D...210	50.04.0125	1N4448	Diode		
	D...220	50.04.0125	1N4448	Diode		
	D...230	50.04.0125	1N4448	Diode		
	D...240	50.04.0125	1N4448	Diode		
	D...250	50.04.0125	1N4448	Diode		
	D...260	50.04.0125	1N4448	Diode		
	D...270	50.04.0125	1N4448	Diode		
	D...280	50.04.0125	1N4448	Diode		
	IC...10	50.09.0117	NC33078			Not
	IC...20	50.09.0117	NC33078			Not
	IC...30	50.09.0117	NC33078			Not
	IC...40	50.09.0117	NC33078			Not
	IC...50	50.09.0117	NC33078			Not
	IC...60	50.09.0117	NC33078			Not
	IC...70	50.09.0117	NC33078			Not
	IC...80	50.09.0117	NC33078			Not
	J.....1	54.14.5520		AMP 20P	Micro Match	
	J.....2	54.14.5510		AMP 10P	Micro Match	
	J.....3	54.14.5520		AMP 20P	Micro Match	
	J.....4	54.14.5512		AMP 12P	Micro Match	
	J.....6	54.14.5510		AMP 10P	Micro Match	
	J.....7	54.14.5520		AMP 20P	Micro Match	
	J.....8	54.14.5510		AMP 10P	Micro Match	
	J....10	54.21.2002		XLR Jack Print		
	J....20	54.21.2002		XLR Jack Print		
	J....30	54.21.2002		XLR Jack Print		
	J....40	54.21.2002		XLR Jack Print		
	J....50	54.21.2002		XLR Jack Print		
	J....60	54.21.2002		XLR Jack Print		
	J....70	54.21.2002		XLR Jack Print		
	J....80	54.21.2002		XLR Jack Print		
	J....11	54.21.2002		XLR Jack Print		
	J...120	54.21.2002		XLR Jack Print		
	J...130	54.21.2002		XLR Jack Print		
	J...140	54.21.2002		XLR Jack Print		
	J...150	54.21.2002		XLR Jack Print		
	J...160	54.21.2002		XLR Jack Print		
	J...170	54.21.2002		XLR Jack Print		
	J...180	54.21.2002		XLR Jack Print		
	K...210	56.04.0195		Relay 6V		
	K...220	56.04.0195		Relay 6V		
	K...230	56.04.0195		Relay 6V		
	K...240	56.04.0195		Relay 6V		
	K...250	56.04.0195		Relay 6V		
	K...260	56.04.0195		Relay 6V		
	K...270	56.04.0195		Relay 6V		
	K...280	56.04.0195		Relay 6V		
	MP....1	1.775.730.11		Connection UNIT LINE PCB		
01	MP....1	1.775.730.11	Index 1	Connection UNIT LINE PCB		
	P.....1	54.33.6100		Flatpin , 4.8*0.8		
	P.....2	54.33.6100		Flatpin , 4.8*0.8		
	P.....3	54.33.6100		Flatpin , 4.8*0.8		
	P.....4	54.33.6100		Flatpin , 4.8*0.8		
	P.....5	54.14.2003		Flatcable-Plug 26p		
	Q...210	50.03.0515	BC 307	PNP		
	Q...211	50.03.0436	BC 237	NPN		
	Q...220	50.03.0515	BC 307	PNP		
	Q...221	50.03.0436	BC 237	NPN		
	Q...230	50.03.0515	BC 307	PNP		
	Q...231	50.03.0436	BC 237	NPN		
	Q...240	50.03.0515	BC 307	PNP		
	Q...241	50.03.0436	BC 237	NPN		
	Q...250	50.03.0515	BC 307	PNP		
	Q...251	50.03.0436	BC 237	NPN		
	Q...260	50.03.0515	BC 307	PNP		
	Q...261	50.03.0436	BC 237	NPN		
	Q...270	50.03.0515	BC 307	PNP		
	Q...271	50.03.0436	BC 237	NPN		
	Q...280	50.03.0515	BC 307	PNP		
	Q...281	50.03.0436	BC 237	NPN		
	R....10	57.11.3152	1.5 KOhm	1%, 0.25W, MF		
	R....11	57.11.3152	1.5 KOhm	1%, 0.25W, MF		
	R....12	57.11.3392	3.9 KOhm	1%, 0.25W, MF		
	R....13	57.11.3392	3.9 KOhm	1%, 0.25W, MF		
	R....14	57.11.3272	2.7 KOhm	1%, 0.25W, MF		
	R....15	57.11.3272	2.7 KOhm	1%, 0.25W, MF		
	R....16	57.19.0470	47 Ohm	5%, 0.25W, MF	Fusible Resistor!	
	R....20	57.11.3152	1.5 KOhm	1%, 0.25W, MF		
	R....21	57.11.3152	1.5 KOhm	1%, 0.25W, MF		
	R....22	57.11.3392	3.9 KOhm	1%, 0.25W, MF		
	R....23	57.11.3392	3.9 KOhm	1%, 0.25W, MF		
	R....24	57.11.3272	2.7 KOhm	1%, 0.25W, MF		
	R....25	57.11.3272	2.7 KOhm	1%, 0.25W, MF		
	R....26	57.19.0470	47 Ohm	5%, 0.25W, MF	Fusible Resistor!	
	R....30	57.11.3152	1.5 KOhm	1%, 0.25W, MF		
	R....31	57.11.3152	1.5 KOhm	1%, 0.25W, MF		
	R....32	57.11.3392	3.9 KOhm	1%, 0.25W, MF		
	R....33	57.11.3392	3.9 KOhm	1%, 0.25W, MF		
	R....34	57.11.3272	2.7 KOhm	1%, 0.25W, MF		
	R....35	57.11.3272	2.7 KOhm	1%, 0.25W, MF		
	R....36	57.19.0470	47 Ohm	5%, 0.25W, MF	Fusible Resistor!	
	R....40	57.11.3152	1.5 KOhm	1%, 0.25W, MF		
	R....41	57.11.3152	1.5 KOhm	1%, 0.25W, MF		
	R....42	57.11.3392	3.9 KOhm	1%, 0.25W, MF		
	R....43	57.11.3392	3.9 KOhm	1%, 0.25W, MF		
	R....44	57.11.3272	2.7 KOhm	1%, 0.25W, MF		
	R....45	57.11.3272	2.7 KOhm	1%, 0.25W, MF		
	R....46	57.19.0470	47 Ohm	5%, 0.25W, MF	Fusible Resistor!	
	R....50	57.11.3152	1.5 KOhm	1%, 0.25W, MF		
	R....51	57.11.3152	1.5 KOhm	1%, 0.25W, MF		
	R....52	57.11.3392	3.9 KOhm	1%, 0.25W, MF		
	R....53	57.11.3392	3.9 KOhm	1%, 0.25W, MF		
	R....54	57.11.3272	2.7 KOhm	1%, 0.25W, MF		
	R....55	57.11.3272	2.7 KOhm	1%, 0.25W, MF		
	R....56	57.19.0470	47 Ohm	5%, 0.25W, MF	Fusible Resistor!	
	R....60	57.11.3152	1.5 KOhm	1%, 0.25W, MF		
	R....61	57.11.3152	1.5 KOhm	1%, 0.25W, MF		
	R....62	57.11.3392	3.9 KOhm	1%, 0.25W, MF		
	R....63	57.11.3392	3.9 KOhm	1%, 0.25W, MF		
	R....64	57.11.3272	2.7 KOhm	1%, 0.25W, MF		
	R....65	57.11.3272	2.7 KOhm	1%, 0.25W, MF		
	R....66	57.19.0470	47 Ohm	5%, 0.25W, MF	Fusible Resistor!	
	R....70	57.11.3152	1.5 KOhm	1%, 0.25W, MF		
	R....71	57.11.3152	1.5 KOhm	1%, 0.25W, MF		

1.775.730.00 CONNECTION UNIT LINE (CONT.)

Ad	..Pos..	...Ref.No...	Description		
	R....72	57.11.3392	3.9 KOhm	1%, 0.25W, MF	
	R....73	57.11.3392	3.9 KOhm	1%, 0.25W, MF	
	R....74	57.11.3272	2.7 KOhm	1%, 0.25W, MF	
	R....75	57.11.3272	2.7 KOhm	1%, 0.25W, MF	
	R....76	57.19.0470	47 Ohm	5%, 0.25W, MF	Fusible Resistor!
	R....80	57.11.3152	1.5 KOhm	1%, 0.25W, MF	
	R....81	57.11.3152	1.5 KOhm	1%, 0.25W, MF	
	R....82	57.11.3392	3.9 KOhm	1%, 0.25W, MF	
	R....83	57.11.3392	3.9 KOhm	1%, 0.25W, MF	
	R....84	57.11.3272	2.7 KOhm	1%, 0.25W, MF	
	R....85	57.11.3272	2.7 KOhm	1%, 0.25W, MF	
	R....86	57.19.0470	47 Ohm	5%, 0.25W, MF	Fusible Resistor!
	R...110	57.11.3152	1.5 KOhm	1%, 0.25W, MF	
	R...111	57.11.3152	1.5 KOhm	1%, 0.25W, MF	
	R...112	57.11.3392	3.9 KOhm	1%, 0.25W, MF	
	R...113	57.11.3392	3.9 KOhm	1%, 0.25W, MF	
	R...114	57.11.3272	2.7 KOhm	1%, 0.25W, MF	
	R...115	57.11.3272	2.7 KOhm	1%, 0.25W, MF	
	R...116	57.19.0470	47 Ohm	5%, 0.25W, MF	Fusible Resistor!
	R...120	57.11.3152	1.5 KOhm	1%, 0.25W, MF	
	R...121	57.11.3152	1.5 KOhm	1%, 0.25W, MF	
	R...122	57.11.3392	3.9 KOhm	1%, 0.25W, MF	
	R...123	57.11.3392	3.9 KOhm	1%, 0.25W, MF	
	R...124	57.11.3272	2.7 KOhm	1%, 0.25W, MF	
	R...125	57.11.3272	2.7 KOhm	1%, 0.25W, MF	
	R...126	57.19.0470	47 Ohm	5%, 0.25W, MF	Fusible Resistor!
	R...130	57.11.3152	1.5 KOhm	1%, 0.25W, MF	
	R...131	57.11.3152	1.5 KOhm	1%, 0.25W, MF	
	R...132	57.11.3392	3.9 KOhm	1%, 0.25W, MF	
	R...133	57.11.3392	3.9 KOhm	1%, 0.25W, MF	
	R...134	57.11.3272	2.7 KOhm	1%, 0.25W, MF	
	R...135	57.11.3272	2.7 KOhm	1%, 0.25W, MF	
	R...136	57.19.0470	47 Ohm	5%, 0.25W, MF	Fusible Resistor!
	R...140	57.11.3152	1.5 KOhm	1%, 0.25W, MF	
	R...141	57.11.3152	1.5 KOhm	1%, 0.25W, MF	
	R...142	57.11.3392	3.9 KOhm	1%, 0.25W, MF	
	R...143	57.11.3392	3.9 KOhm	1%, 0.25W, MF	
	R...144	57.11.3272	2.7 KOhm	1%, 0.25W, MF	
	R...145	57.11.3272	2.7 KOhm	1%, 0.25W, MF	
	R...146	57.19.0470	47 Ohm	5%, 0.25W, MF	Fusible Resistor!
	R...150	57.11.3152	1.5 KOhm	1%, 0.25W, MF	
	R...151	57.11.3152	1.5 KOhm	1%, 0.25W, MF	
	R...152	57.11.3392	3.9 KOhm	1%, 0.25W, MF	
	R...153	57.11.3392	3.9 KOhm	1%, 0.25W, MF	
	R...154	57.11.3272	2.7 KOhm	1%, 0.25W, MF	
	R...155	57.11.3272	2.7 KOhm	1%, 0.25W, MF	
	R...156	57.19.0470	47 Ohm	5%, 0.25W, MF	Fusible Resistor!
	R...160	57.11.3152	1.5 KOhm	1%, 0.25W, MF	
	R...161	57.11.3152	1.5 KOhm	1%, 0.25W, MF	
	R...162	57.11.3392	3.9 KOhm	1%, 0.25W, MF	
	R...163	57.11.3392	3.9 KOhm	1%, 0.25W, MF	
	R...164	57.11.3272	2.7 KOhm	1%, 0.25W, MF	
	R...165	57.11.3272	2.7 KOhm	1%, 0.25W, MF	
	R...166	57.19.0470	47 Ohm	5%, 0.25W, MF	Fusible Resistor!
	R...170	57.11.3152	1.5 KOhm	1%, 0.25W, MF	
	R...171	57.11.3152	1.5 KOhm	1%, 0.25W, MF	
	R...172	57.11.3392	3.9 KOhm	1%, 0.25W, MF	
	R...173	57.11.3392	3.9 KOhm	1%, 0.25W, MF	
	R...174	57.11.3272	2.7 KOhm	1%, 0.25W, MF	
	R...175	57.11.3272	2.7 KOhm	1%, 0.25W, MF	
	R...176	57.19.0470	47 Ohm	5%, 0.25W, MF	Fusible Resistor!
	R...180	57.11.3152	1.5 KOhm	1%, 0.25W, MF	
	R...181	57.11.3152	1.5 KOhm	1%, 0.25W, MF	
	R...182	57.11.3392	3.9 KOhm	1%, 0.25W, MF	
	R...183	57.11.3392	3.9 KOhm	1%, 0.25W, MF	
	R...184	57.11.3272	2.7 KOhm	1%, 0.25W, MF	
	R...185	57.11.3272	2.7 KOhm	1%, 0.25W, MF	
	R...186	57.19.0470	47 Ohm	5%, 0.25W, MF	Fusible Resistor!
	R...210	57.11.3223	22 KOhm	1%, 0.25W, MF	
	R...211	57.11.3223	22 KOhm	1%, 0.25W, MF	
	R...212	57.11.3223	22 KOhm	1%, 0.25W, MF	
	R...213	57.11.3154	150 KOhm	1%, 0.25W, MF	
	R...220	57.11.3223	22 KOhm	1%, 0.25W, MF	
	R...221	57.11.3223	22 KOhm	1%, 0.25W, MF	
	R...222	57.11.3223	22 KOhm	1%, 0.25W, MF	
	R...223	57.11.3154	150 KOhm	1%, 0.25W, MF	
	R...230	57.11.3223	22 KOhm	1%, 0.25W, MF	
	R...231	57.11.3223	22 KOhm	1%, 0.25W, MF	
	R...232	57.11.3223	22 KOhm	1%, 0.25W, MF	
	R...233	57.11.3154	150 KOhm	1%, 0.25W, MF	
	R...240	57.11.3223	22 KOhm	1%, 0.25W, MF	
	R...241	57.11.3223	22 KOhm	1%, 0.25W, MF	
	R...242	57.11.3223	22 KOhm	1%, 0.25W, MF	
	R...243	57.11.3154	150 KOhm	1%, 0.25W, MF	
	R...250	57.11.3223	22 KOhm	1%, 0.25W, MF	
	R...251	57.11.3223	22 KOhm	1%, 0.25W, MF	
	R...252	57.11.3223	22 KOhm	1%, 0.25W, MF	
	R...253	57.11.3154	150 KOhm	1%, 0.25W, MF	
	R...260	57.11.3223	22 KOhm	1%, 0.25W, MF	
	R...261	57.11.3223	22 KOhm	1%, 0.25W, MF	
	R...262	57.11.3223	22 KOhm	1%, 0.25W, MF	
	R...263	57.11.3154	150 KOhm	1%, 0.25W, MF	
	R...270	57.11.3223	22 KOhm	1%, 0.25W, MF	
	R...271	57.11.3223	22 KOhm	1%, 0.25W, MF	
	R...272	57.11.3223	22 KOhm	1%, 0.25W, MF	
	R...273	57.11.3154	150 KOhm	1%, 0.25W, MF	
	R...280	57.11.3223	22 KOhm	1%, 0.25W, MF	
	R...281	57.11.3223	22 KOhm	1%, 0.25W, MF	
	R...282	57.11.3223	22 KOhm	1%, 0.25W, MF	
	R...283	57.11.3154	150 KOhm	1%, 0.25W, MF	
	S.....1	55.01.0168		DIP-Switch 8P	
	W.....1	1.023.391.36		Flatcable 16p	
	W.....2	1.023.391.36		Flatcable 16p	
	W.....3	1.023.391.36		Flatcable 16p	
	W.....4	1.023.391.36		Flatcable 16p	
	W.....5	1.023.391.36		Flatcable 16p	
	W.....6	1.023.391.36		Flatcable 16p	
	W.....7	1.023.391.36		Flatcable 16p	
	W.....8	1.023.391.36		Flatcable 16p	

00 KG 91/08/28
01 UL 91/11/04

Left Input Channel 1-8 : NO. 10..- 80..
Right Input Channel 1-8 : NO. 110..- 180..
Fader Start 1-8 : NO. 210..- 280..

Mf=Metalfilm

C=Ceramic,PETP=Polyester,EL=Electrolytic,PP=Polypropylen

MANUFACTURER: Sig=Signetics, ST=Studer, Mot=Motorola, Ra=Raytheon

END

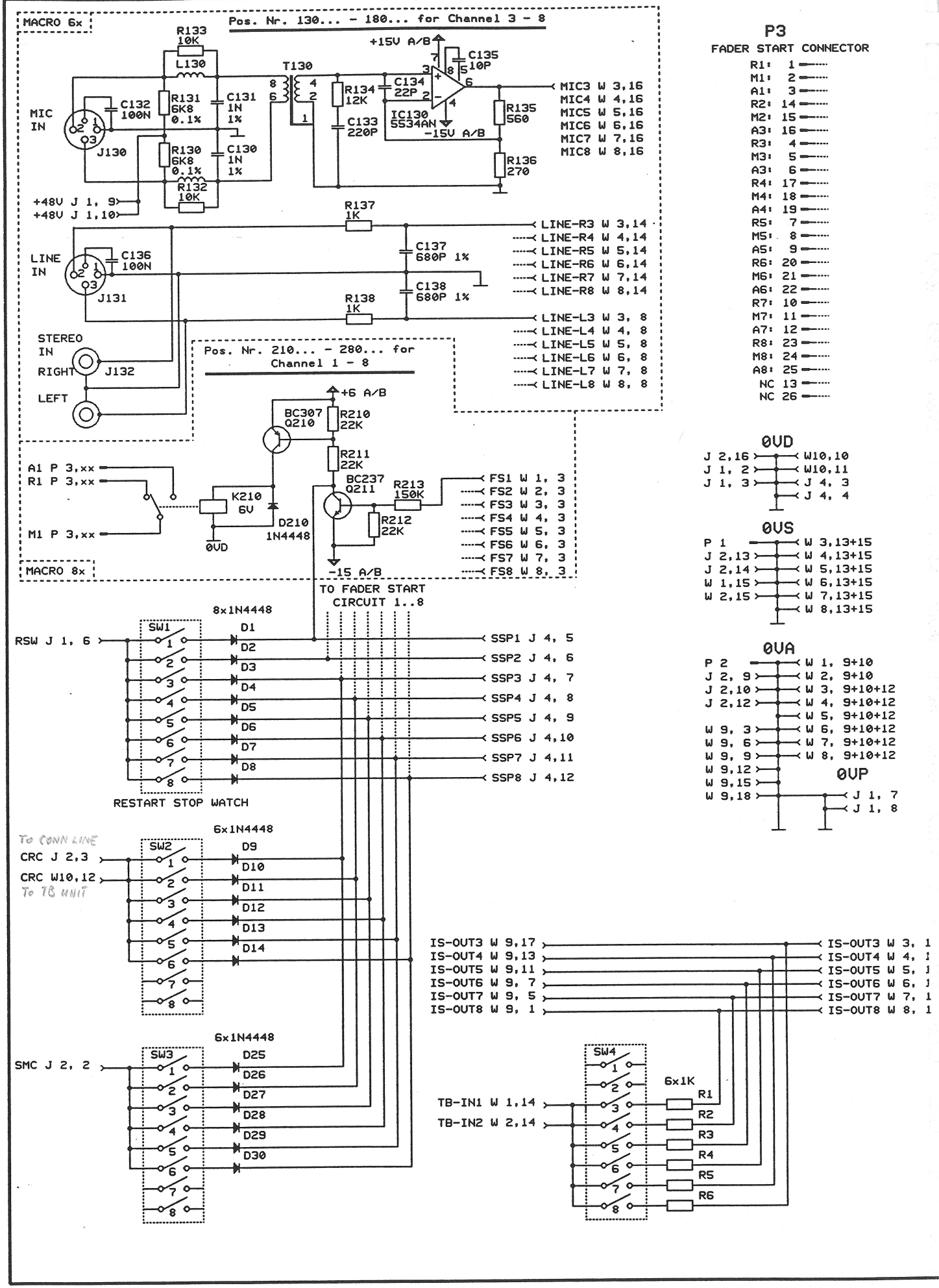
MACRO 6x
Pos. Nr. 130... - 180... for Channel 3 - 8
R133 10K
L130
T130
+15V A/B
C135 10P
C134 22P
R134 12K
C133 220P
IC130 5534AN
-15V A/B
R135 560
R136 270
MIC IN
J130
C132 100N
R131 6K8 0.1%
C131 1N 1%
R130 6K8 0.1%
C130 1N 1%
R132 10K
+48V J 1, 9
+48V J 1,10
MIC3 W 3,16
MIC4 W 4,16
MIC5 W 5,16
MIC6 W 6,16
MIC7 W 7,16
MIC8 W 8,16
R137 1K
LINE IN
J131
C136 100N
C137 680P 1%
C138 680P 1%
R138 1K
LINE-R3 W 3,14
LINE-R4 W 4,14
LINE-R5 W 5,14
LINE-R6 W 6,14
LINE-R7 W 7,14
LINE-R8 W 8,14
LINE-L3 W 3, 8
LINE-L4 W 4, 8
LINE-L5 W 5, 8
LINE-L6 W 6, 8
LINE-L7 W 7, 8
LINE-L8 W 8, 8
STEREO IN
RIGHT
J132
LEFT
Pos. Nr. 210... - 280... for Channel 1 - 8
+6 A/B
BC307 Q210
R210 22K
R211 22K
BC237 Q211
R213 150K
R212 22K
A1 P 3,xx
R1 P 3,xx
M1 P 3,xx
K210 6V
D210 1N4448
0VD
-15 A/B
FS1 W 1, 3
FS2 W 2, 3
FS3 W 3, 3
FS4 W 4, 3
FS5 W 5, 3
FS6 W 6, 3
FS7 W 7, 3
FS8 W 8, 3
MACRO 8x
TO FADER START CIRCUIT 1..8
8x1N4448
SW1
RSW J 1, 6
D1
D2
D3
D4
D5
D6
D7
D8
SSP1 J 4, 5
SSP2 J 4, 6
SSP3 J 4, 7
SSP4 J 4, 8
SSP5 J 4, 9
SSP6 J 4,10
SSP7 J 4,11
SSP8 J 4,12
RESTART STOP WATCH
6x1N4448
SW2
To CONN LINE
CRC J 2,3
CRC W10,12
To TB UNIT
D9
D10
D11
D12
D13
D14
6x1N4448
SW3
SMC J 2, 2
D25
D26
D27
D28
D29
D30
IS-OUT3 W 9,17
IS-OUT4 W 9,13
IS-OUT5 W 9,11
IS-OUT6 W 9, 7
IS-OUT7 W 9, 5
IS-OUT8 W 9, 1
IS-OUT3 W 3, 1
IS-OUT4 W 4, 1
IS-OUT5 W 5, 1
IS-OUT6 W 6, 1
IS-OUT7 W 7, 1
IS-OUT8 W 8, 1
SW4
6x1K
R1
R2
R3
R4
R5
R6
TB-IN1 W 1,14
TB-IN2 W 2,14
P3
FADER START CONNECTOR
R1: 1
M1: 2
A1: 3
R2: 14
M2: 15
A3: 16
R3: 4
M3: 5
A3: 6
R4: 17
M4: 18
A4: 19
R5: 7
M5: 8
A5: 9
R6: 20
M6: 21
A6: 22
R7: 10
M7: 11
A7: 12
R8: 23
M8: 24
A8: 25
NC 13
NC 26
0VD
J 2,16
J 1, 2
J 1, 3
W10,10
W10,11
J 4, 3
J 4, 4
0VS
P 1
J 2,13
J 2,14
W 1,15
W 2,15
W 3,13+15
W 4,13+15
W 5,13+15
W 6,13+15
W 7,13+15
W 8,13+15
0VA
P 2
J 2, 9
J 2,10
J 2,12
W 9, 3
W 9, 6
W 9, 9
W 9,12
W 9,15
W 9,18
W 1, 9+10
W 2, 9+10
W 3, 9+10+12
W 4, 9+10+12
W 5, 9+10+12
W 6, 9+10+12
W 7, 9+10+12
W 8, 9+10+12
0VP
J 1, 7
J 1, 8

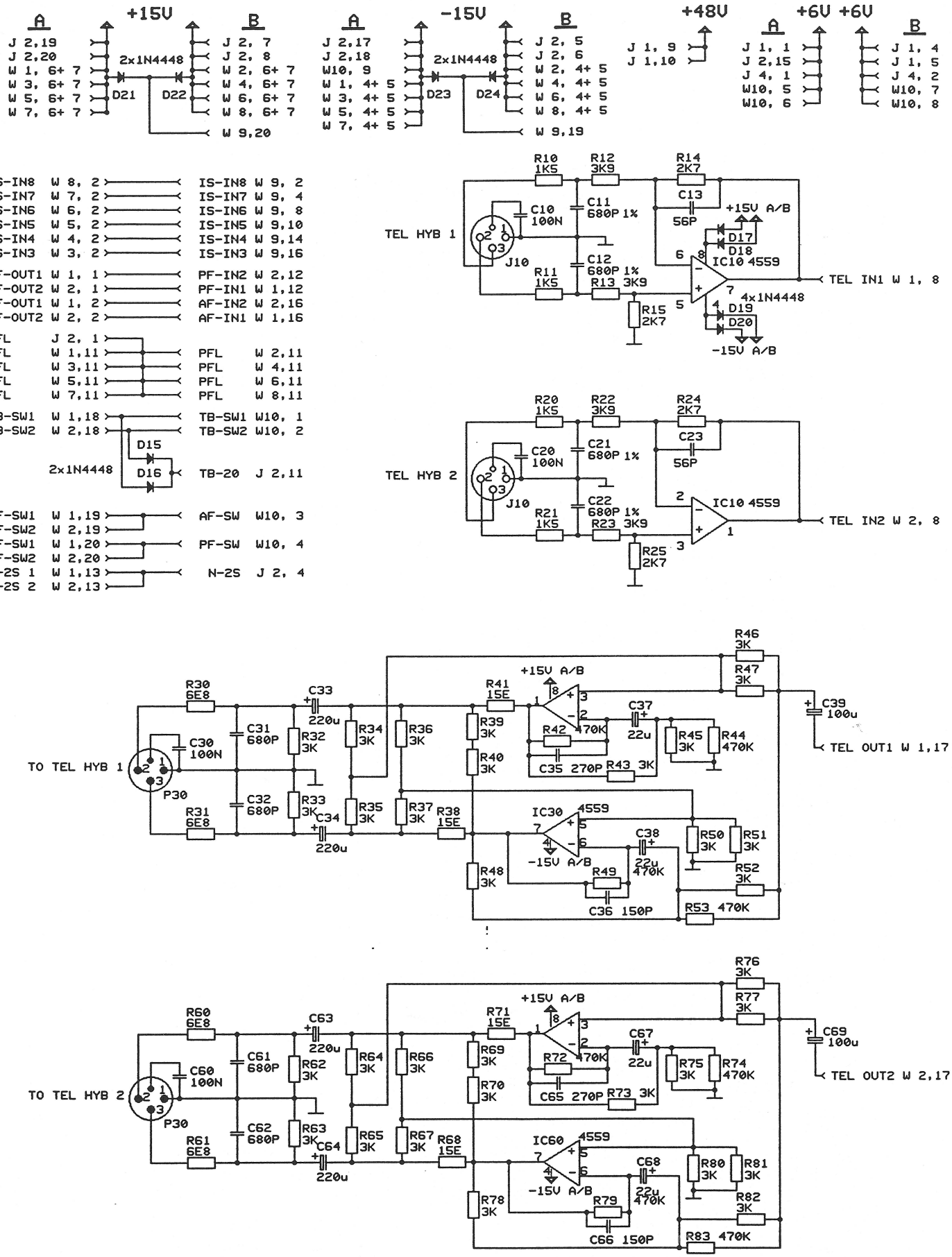

⓪ JUN-28-91 A.T.	○ SEP-12-91 UL	○	○	○
	MIXING CONSOLE MB16			PAGE 1 OF 1
REVOX	CONNECTION UNIT MIC		SC	1.775.740.00

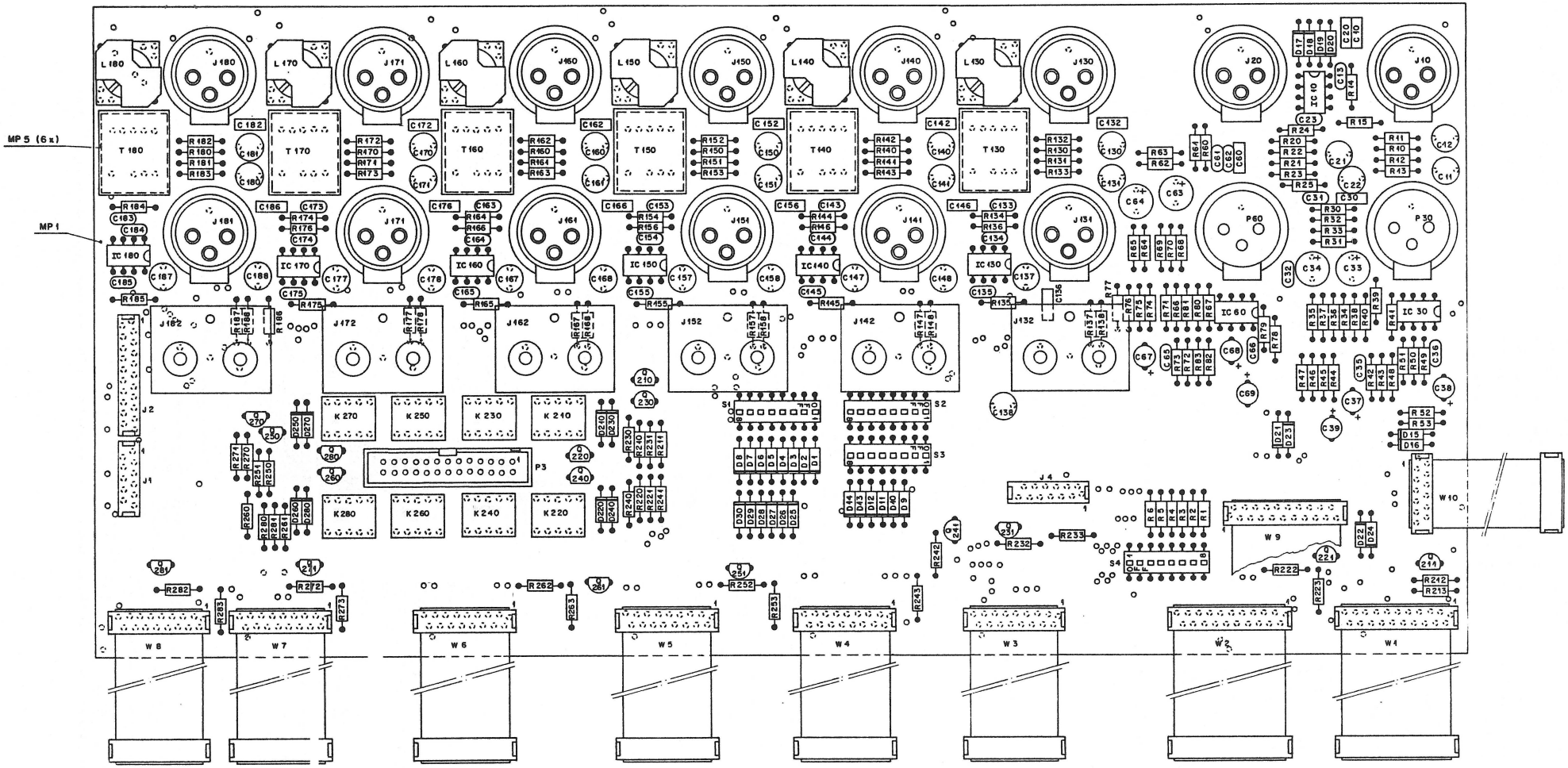

Werkstoff: Norm-Nr.: DIN-Bez.: Abmessung:	Oberfläche: Güte, Ben.		Änderung: 3 2 1
Zugehörige Unterlagen: PL	Freimasstoleranz: -	Massstab: 2 : 1	Ausgabe: 3.7.91 0
Ersatz für:	Ersetzt durch:		Kopie für:
STUDER RE	CONNECTION UNIT MIC		Nummer: 1 40-0

1.775.740.00 CONNECTION UNIT MIC

Ad	..Pos..	...Ref.No...	Description			
	C....10	59.06.0104	100 nF	10%, 25V,	PETP	
	C....11	59.05.1681	680 pF	1%, 25V,	C	
	C....12	59.05.1681	680 pF	1%, 25V,	C	
	C....13	59.34.4560	56 pF	5%, 25V,	C	
	C....20	59.06.0104	100 nF	10%, 25V,	PETP	
	C....21	59.05.1681	680 pF	1%, 25V,	C	
	C....22	59.05.1681	680 pF	1%, 25V,	C	
	C....23	59.34.4560	56 pF	5%, 25V,	C	
	C....30	59.06.0104	100 nF	10%, 25V,	PETP	
	C....31	59.32.2681	680 pF	10%, 25V,	C	
	C....32	59.32.2681	680 pF	10%, 25V,	C	
	C....33	59.22.3221	220 uF	-20%, 10V,	EL	
	C....34	59.22.3221	220 uF	-20%, 10V,	EL	
	C....35	59.34.4271	270 pF	5%, 25V,	C	
	C....36	59.34.4151	150 pF	5%, 25V,	C	
	C....37	59.22.5220	22 uF	-20%, 10V,	EL	
	C....38	59.22.5220	22 uF	-20%, 10V,	EL	
	C....39	59.22.3101	100 uF	-20%, 10V,	EL	
	C....60	59.06.0104	100 nF	10%, 25V,	PETP	
	C....61	59.32.2681	680 pF	10%, 25V,	C	
	C....62	59.32.2681	680 pF	10%, 25V,	C	
	C....63	59.22.3221	220 uF	-20%, 10V,	EL	
	C....64	59.22.3221	220 uF	-20%, 10V,	EL	
	C....65	59.34.4271	270 pF	5%, 25V,	C	
	C....66	59.34.4151	150 pF	5%, 25V,	C	
	C....67	59.22.5220	22 uF	-20%, 10V,	EL	
	C....68	59.22.5220	22 uF	-20%, 10V,	EL	
	C....69	59.22.3101	100 uF	-20%, 10V,	EL	
	C...130	59.05.1102	1 nF	1%, 25V,	PP	
	C...131	59.05.1102	1 nF	1%, 25V,	PP	
	C...132	59.06.0104	100 nF	10%, 25V,	PETP	
	C...133	59.34.4221	220 pF	10%, 25V,	C	
	C...134	59.34.2220	22 pF	10%, 25V,	C	
	C...135	59.34.1100	10 pF	10%, 25V,	C	
	C...136	59.06.0104	100 nF	10%, 25V,	PETP	
	C...137	59.05.1681	680 pF	1%, 25V,	C	
	C...138	59.05.1681	680 pF	1%, 25V,	C	
	C...140	59.05.1102	1 nF	1%, 25V,	PP	
	C...141	59.05.1102	1 nF	1%, 25V,	PP	
	C...142	59.06.0104	100 nF	10%, 25V,	PETP	
	C...143	59.34.4221	220 pF	10%, 25V,	C	
	C...144	59.34.2220	22 pF	10%, 25V,	C	
	C...145	59.34.1100	10 pF	10%, 25V,	C	
	C...146	59.06.0104	100 nF	10%, 25V,	PETP	
	C...147	59.05.1681	680 pF	1%, 25V,	C	
	C...148	59.05.1681	680 pF	1%, 25V,	C	
	C...150	59.05.1102	1 nF	1%, 25V,	PP	
	C...151	59.05.1102	1 nF	1%, 25V,	PP	
	C...152	59.06.0104	100 nF	10%, 25V,	PETP	
	C...153	59.34.4221	220 pF	10%, 25V,	C	
	C...154	59.34.2220	22 pF	10%, 25V,	C	
	C...155	59.34.1100	10 pF	10%, 25V,	C	
	C...156	59.06.0104	100 nF	10%, 25V,	PETP	
	C...157	59.05.1681	680 pF	1%, 25V,	C	
	C...158	59.05.1681	680 pF	1%, 25V,	C	
	C...160	59.05.1102	1 nF	1%, 25V,	PP	
	C...161	59.05.1102	1 nF	1%, 25V,	PP	
	C...162	59.06.0104	100 nF	10%, 25V,	PETP	
	C...163	59.34.4221	220 pF	10%, 25V,	C	
	C...164	59.34.2220	22 pF	10%, 25V,	C	
	C...165	59.34.1100	10 pF	10%, 25V,	C	
	C...166	59.06.0104	100 nF	10%, 25V,	PETP	
	C...167	59.05.1681	680 pF	1%, 25V,	C	
	C...168	59.05.1681	680 pF	1%, 25V,	C	
	C...170	59.05.1102	1 nF	1%, 25V,	PP	
	C...171	59.05.1102	1 nF	1%, 25V,	PP	
	C...172	59.06.0104	100 nF	10%, 25V,	PETP	
	C...173	59.34.4221	220 pF	10%, 25V,	C	
	C...174	59.34.2220	22 pF	10%, 25V,	C	
	C...175	59.34.1100	10 pF	10%, 25V,	C	
	C...176	59.06.0104	100 nF	10%, 25V,	PETP	
	C...177	59.05.1681	680 pF	1%, 25V,	C	
	C...178	59.05.1681	680 pF	1%, 25V,	C	
	C...180	59.05.1102	1 nF	1%, 25V,	PP	
	C...181	59.05.1102	1 nF	1%, 25V,	PP	
	C...182	59.06.0104	100 nF	10%, 25V,	PETP	
	C...183	59.34.4221	220 pF	10%, 25V,	C	
	C...184	59.34.2220	22 pF	10%, 25V,	C	
	C...185	59.34.1100	10 pF	10%, 25V,	C	
	C...186	59.06.0104	100 nF	10%, 25V,	PETP	
	C...187	59.05.1681	680 pF	1%, 25V,	C	
	C...188	59.05.1681	680 pF	1%, 25V,	C	
	D.....1	50.04.0125	1N4448	Diode		
	D.....2	50.04.0125	1N4448	Diode		
	D.....3	50.04.0125	1N4448	Diode		
	D.....4	50.04.0125	1N4448	Diode		
	D.....5	50.04.0125	1N4448	Diode		
	D.....6	50.04.0125	1N4448	Diode		
	D.....7	50.04.0125	1N4448	Diode		
	D.....8	50.04.0125	1N4448	Diode		
	D.....9	50.04.0125	1N4448	Diode		
	D....10	50.04.0125	1N4448	Diode		
	D....11	50.04.0125	1N4448	Diode		
	D....12	50.04.0125	1N4448	Diode		
	D....13	50.04.0125	1N4448	Diode		
	D....14	50.04.0125	1N4448	Diode		
	D....15	50.04.0125	1N4448	Diode		
	D....16	50.04.0125	1N4448	Diode		
	D....17	50.04.0125	1N4448	Diode		
	D....18	50.04.0125	1N4448	Diode		
	D....19	50.04.0125	1N4448	Diode		
	D....20	50.04.0125	1N4448	Diode		
	D....21	50.04.0125	1N4448	Diode		
	D....22	50.04.0125	1N4448	Diode		
	D....23	50.04.0125	1N4448	Diode		
	D....24	50.04.0125	1N4448	Diode		
	D....25	50.04.0125	1N4448	Diode		
	D....26	50.04.0125	1N4448	Diode		
	D....27	50.04.0125	1N4448	Diode		
	D....28	50.04.0125	1N4448	Diode		
	D....29	50.04.0125	1N4448	Diode		
	D....30	50.04.0125	1N4448	Diode		
	D...210	50.04.0125	1N4448	Diode		
	D...220	50.04.0125	1N4448	Diode		
	D...230	50.04.0125	1N4448	Diode		
	D...240	50.04.0125	1N4448	Diode		
	D...250	50.04.0125	1N4448	Diode		
	D...260	50.04.0125	1N4448	Diode		
	D...270	50.04.0125	1N4448	Diode		
	D...280	50.04.0125	1N4448	Diode		
	IC...10	50.09.0107	RC4559			
	IC...30	50.09.0107	RC4559			
	IC...60	50.09.0107	RC4559			
	IC..130	50.05.0244	NE5534A			Sig
	IC..140	50.05.0244	NE5534A			Sig
	IC..150	50.05.0244	NE5534A			Sig
	IC..160	50.05.0244	NE5534A			Sig
	IC..170	50.05.0244	NE5534A			Sig
	IC..180	50.05.0244	NE5534A			Sig
	J.....1	54.14.5510		AMP 10P	Micro Match	
	J.....2	54.14.5520		AMP 20P	Micro Match	
	J.....4	54.14.5512		AMP 12P	Micro Match	
	J....10	54.21.2002		XLR Jack Print		
	J....20	54.21.2002		XLR Jack Print		
	J....13	54.21.2002		XLR Jack Print		
	J...131	54.21.2002		XLR Jack Print		
	J...132	54.21.2012	2-Pole	Pin Jacks		
	J...140	54.21.2002		XLR Jack Print		
	J...141	54.21.2002		XLR Jack Print		
	J...142	54.21.2012	2-Pole	Pin Jacks		
	J...150	54.21.2002		XLR Jack Print		
	J...151	54.21.2002		XLR Jack Print		
	J...152	54.21.2012	2-Pole	Pin Jacks		
	J...160	54.21.2002		XLR Jack Print		
	J...161	54.21.2002		XLR Jack Print		
	J...162	54.21.2012	2-Pole	Pin Jacks		
	J...170	54.21.2002		XLR Jack Print		
	J...171	54.21.2002		XLR Jack Print		
	J...172	54.21.2012	2-Pole	Pin Jacks		
	J...180	54.21.2002		XLR Jack Print		
	J...181	54.21.2002		XLR Jack Print		
	J...182	54.21.2012	2-Pole	Pin Jacks		
	K...210	56.04.0195		Relay 6V		
	K...220	56.04.0195		Relay 6V		
	K...230	56.04.0195		Relay 6V		
	K...240	56.04.0195		Relay 6V		
	K...250	56.04.0195		Relay 6V		
	K...260	56.04.0195		Relay 6V		
	K...270	56.04.0195		Relay 6V		
	K...280	56.04.0195		Relay 6V		
	L...130	1.022.207.00		Coil		ST
	L...140	1.022.207.00		Coil		ST
	L...150	1.022.207.00		Coil		ST
	L...160	1.022.207.00		Coil		ST
	L...170	1.022.207.00		Coil		ST
	L...180	1.022.207.00		Coil		ST
	MP....1	1.775.740.11		Connection Unit Mic PCB		
	MP....5	1.022.400.03	6 pcs	Pad Transformer		
	P.....1	54.33.6100		Faston Connector 4,8mmx0,8mm		
	P.....2	54.33.6100		Faston Connector 4,8mmx0,8mm		
	P.....3	54.14.2003		Flatkable-Connector 26p		
	P....30	54.21.2001		XLR Plug Print		
	P....60	54.21.2001		XLR Plug Print		
	Q...210	50.03.0515	BC 307	PNP		
	Q...211	50.03.0436	BC 237	NPN		
	Q...220	50.03.0515	BC 307	PNP		
	Q...221	50.03.0436	BC 237	NPN		
	Q...230	50.03.0515	BC 307	PNP		
	Q...231	50.03.0436	BC 237	NPN		
	Q...240	50.03.0515	BC 307	PNP		
	Q...241	50.03.0436	BC 237	NPN		
	Q...250	50.03.0515	BC 307	PNP		
	Q...251	50.03.0436	BC 237	NPN		
	Q...260	50.03.0515	BC 307	PNP		
	Q...261	50.03.0436	BC 237	NPN		
	Q...270	50.03.0515	BC 307	PNP		

1.775.740.00 CONNECTION UNIT MIC (CONT.)

Ad	..Pos..	...Ref.No...	Description		
	Q...271	50.03.0436	BC 237	NPN	
	Q...280	50.03.0515	BC 307	PNP	
	Q...281	50.03.0436	BC 237	NPN	
	R.....1	57.11.3103	10 KOhm	1%, 0.25W, MF	
	R.....2	57.11.3103	10 KOhm	1%, 0.25W, MF	
	R.....3	57.11.3103	10 KOhm	1%, 0.25W, MF	
	R.....4	57.11.3103	10 KOhm	1%, 0.25W, MF	
	R.....5	57.11.3103	10 KOhm	1%, 0.25W, MF	
	R.....6	57.11.3103	10 KOhm	1%, 0.25W, MF	
	R....10	57.11.3152	1.5 KOhm	1%, 0.25W, MF	
	R....11	57.11.3152	1.5 KOhm	1%, 0.25W, MF	
	R....12	57.11.3392	3.9 KOhm	1%, 0.25W, MF	
	R....13	57.11.3392	3.9 KOhm	1%, 0.25W, MF	
	R....14	57.11.3272	2.7 KOhm	1%, 0.25W, MF	
	R....15	57.11.3272	2.7 KOhm	1%, 0.25W, MF	
	R....20	57.11.3152	1.5 KOhm	1%, 0.25W, MF	
	R....21	57.11.3152	1.5 KOhm	1%, 0.25W, MF	
	R....22	57.11.3392	3.9 KOhm	1%, 0.25W, MF	
	R....23	57.11.3392	3.9 KOhm	1%, 0.25W, MF	
	R....24	57.11.3272	2.7 KOhm	1%, 0.25W, MF	
	R....25	57.11.3272	2.7 KOhm	1%, 0.25W, MF	
	R....30	57.11.3689	6.8 Ohm	1%, 0.25W, MF	
	R....31	57.11.3689	6.8 Ohm	1%, 0.25W, MF	
	R....32	57.11.3302	3 KOhm	1%, 0.25W, MF	
	R....33	57.11.3302	3 KOhm	1%, 0.25W, MF	
	R....34	57.11.3302	3 KOhm	1%, 0.25W, MF	
	R....35	57.11.3302	3 KOhm	1%, 0.25W, MF	
	R....36	57.11.3302	3 KOhm	1%, 0.25W, MF	
	R....37	57.11.3302	3 KOhm	1%, 0.25W, MF	
	R....38	57.11.3150	15 Ohm	1%, 0.25W, MF	
	R....39	57.11.3302	3 KOhm	1%, 0.25W, MF	
	R....40	57.11.3302	3 KOhm	1%, 0.25W, MF	
	R....41	57.11.3150	15 Ohm	1%, 0.25W, MF	
	R....42	57.11.3474	470 KOhm	1%, 0.25W, MF	
	R....43	57.11.3302	3 KOhm	1%, 0.25W, MF	
	R....44	57.11.3474	470 KOhm	1%, 0.25W, MF	
	R....45	57.11.3302	3 KOhm	1%, 0.25W, MF	
	R....46	57.11.3302	3 KOhm	1%, 0.25W, MF	
	R....47	57.11.3302	3 KOhm	1%, 0.25W, MF	
	R....48	57.11.3302	3 KOhm	1%, 0.25W, MF	
	R....49	57.11.3474	470 KOhm	1%, 0.25W, MF	
	R....50	57.11.3302	3 KOhm	1%, 0.25W, MF	
	R....51	57.11.3302	3 KOhm	1%, 0.25W, MF	
	R....52	57.11.3302	3 KOhm	1%, 0.25W, MF	
	R....53	57.11.3474	470 KOhm	1%, 0.25W, MF	
	R....60	57.11.3689	6.8 Ohm	1%, 0.25W, MF	
	R....61	57.11.3689	6.8 Ohm	1%, 0.25W, MF	
	R....62	57.11.3302	3 KOhm	1%, 0.25W, MF	
	R....63	57.11.3302	3 KOhm	1%, 0.25W, MF	
	R....64	57.11.3302	3 KOhm	1%, 0.25W, MF	
	R....65	57.11.3302	3 KOhm	1%, 0.25W, MF	
	R....66	57.11.3302	3 KOhm	1%, 0.25W, MF	
	R....67	57.11.3302	3 KOhm	1%, 0.25W, MF	
	R....68	57.11.3150	15 Ohm	1%, 0.25W, MF	
	R....69	57.11.3302	3 KOhm	1%, 0.25W, MF	
	R....70	57.11.3302	3 KOhm	1%, 0.25W, MF	
	R....71	57.11.3150	15 Ohm	1%, 0.25W, MF	
	R....72	57.11.3474	470 KOhm	1%, 0.25W, MF	
	R....73	57.11.3302	3 KOhm	1%, 0.25W, MF	
	R....74	57.11.3474	470 KOhm	1%, 0.25W, MF	
	R....75	57.11.3302	3 KOhm	1%, 0.25W, MF	
	R....76	57.11.3302	3 KOhm	1%, 0.25W, MF	
	R....77	57.11.3302	3 KOhm	1%, 0.25W, MF	
	R....78	57.11.3302	3 KOhm	1%, 0.25W, MF	
	R....79	57.11.3474	470 KOhm	1%, 0.25W, MF	
	R....80	57.11.3302	3 KOhm	1%, 0.25W, MF	
	R....81	57.11.3302	3 KOhm	1%, 0.25W, MF	
	R....82	57.11.3302	3 KOhm	1%, 0.25W, MF	
	R....83	57.11.3474	470 KOhm	1%, 0.25W, MF	
	R...130	57.99.0250	6.8 KOhm	0.1%, 0.25W, MF	
	R...131	57.99.0250	6.8 KOhm	0.1%, 0.25W, MF	
	R...132	57.11.3103	10 KOhm	1%, 0.25W, MF	
	R...133	57.11.3103	10 KOhm	1%, 0.25W, MF	
	R...134	57.11.3123	12 KOhm	1%, 0.25W, MF	
	R...135	57.11.3561	560 Ohm	1%, 0.25W, MF	
	R...136	57.11.3271	270 Ohm	1%, 0.25W, MF	
	R...137	57.11.3102	1 KOhm	1%, 0.25W, MF	
	R...138	57.11.3102	1 KOhm	1%, 0.25W, MF	
	R...140	57.99.0250	6.8 KOhm	0.1%, 0.25W, MF	
	R...141	57.99.0250	6.8 KOhm	0.1%, 0.25W, MF	
	R...142	57.11.3103	10 KOhm	1%, 0.25W, MF	
	R...143	57.11.3103	10 KOhm	1%, 0.25W, MF	
	R...144	57.11.3123	12 KOhm	1%, 0.25W, MF	
	R...145	57.11.3561	560 Ohm	1%, 0.25W, MF	
	R...146	57.11.3271	270 Ohm	1%, 0.25W, MF	
	R...147	57.11.3102	1 KOhm	1%, 0.25W, MF	
	R...148	57.11.3102	1 KOhm	1%, 0.25W, MF	
	R...150	57.99.0250	6.8 KOhm	0.1%, 0.25W, MF	
	R...151	57.99.0250	6.8 KOhm	0.1%, 0.25W, MF	
	R...152	57.11.3103	10 KOhm	1%, 0.25W, MF	
	R...153	57.11.3103	10 KOhm	1%, 0.25W, MF	
	R...154	57.11.3123	12 KOhm	1%, 0.25W, MF	
	R...155	57.11.3561	560 Ohm	1%, 0.25W, MF	
	R...156	57.11.3271	270 Ohm	1%, 0.25W, MF	
	R...157	57.11.3102	1 KOhm	1%, 0.25W, MF	
	R...158	57.11.3102	1 KOhm	1%, 0.25W, MF	
	R...160	57.99.0250	6.8 KOhm	0.1%, 0.25W, MF	
	R...161	57.99.0250	6.8 KOhm	0.1%, 0.25W, MF	
	R...162	57.11.3103	10 KOhm	1%, 0.25W, MF	
	R...163	57.11.3103	10 KOhm	1%, 0.25W, MF	
	R...164	57.11.3123	12 KOhm	1%, 0.25W, MF	
	R...165	57.11.3561	560 Ohm	1%, 0.25W, MF	
	R...166	57.11.3271	270 Ohm	1%, 0.25W, MF	
	R...167	57.11.3102	1 KOhm	1%, 0.25W, MF	
	R...168	57.11.3102	1 KOhm	1%, 0.25W, MF	
	R...170	57.99.0250	6.8 KOhm	0.1%, 0.25W, MF	
	R...171	57.99.0250	6.8 KOhm	0.1%, 0.25W, MF	
	R...172	57.11.3103	10 KOhm	1%, 0.25W, MF	
	R...173	57.11.3103	10 KOhm	1%, 0.25W, MF	
	R...174	57.11.3123	12 KOhm	1%, 0.25W, MF	
	R...175	57.11.3561	560 Ohm	1%, 0.25W, MF	
	R...176	57.11.3271	270 Ohm	1%, 0.25W, MF	
	R...177	57.11.3102	1 KOhm	1%, 0.25W, MF	
	R...178	57.11.3102	1 KOhm	1%, 0.25W, MF	
	R...180	57.99.0250	6.8 KOhm	0.1%, 0.25W, MF	
	R...181	57.99.0250	6.8 KOhm	0.1%, 0.25W, MF	
	R...182	57.11.3103	10 KOhm	1%, 0.25W, MF	
	R...183	57.11.3103	10 KOhm	1%, 0.25W, MF	
	R...184	57.11.3123	12 KOhm	1%, 0.25W, MF	
	R...185	57.11.3561	560 Ohm	1%, 0.25W, MF	
	R...186	57.11.3271	270 Ohm	1%, 0.25W, MF	
	R...187	57.11.3102	1 KOhm	1%, 0.25W, MF	
	R...188	57.11.3102	1 KOhm	1%, 0.25W, MF	
	R...210	57.11.3223	22 KOhm	1%, 0.25W, MF	
	R...211	57.11.3223	22 KOhm	1%, 0.25W, MF	
	R...212	57.11.3223	22 KOhm	1%, 0.25W, MF	
	R...213	57.11.3154	150 KOhm	1%, 0.25W, MF	
	R...220	57.11.3223	22 KOhm	1%, 0.25W, MF	
	R...221	57.11.3223	22 KOhm	1%, 0.25W, MF	
	R...222	57.11.3223	22 KOhm	1%, 0.25W, MF	
	R...223	57.11.3154	150 KOhm	1%, 0.25W, MF	
	R...230	57.11.3223	22 KOhm	1%, 0.25W, MF	
	R...231	57.11.3223	22 KOhm	1%, 0.25W, MF	
	R...232	57.11.3223	22 KOhm	1%, 0.25W, MF	
	R...233	57.11.3154	150 KOhm	1%, 0.25W, MF	
	R...240	57.11.3223	22 KOhm	1%, 0.25W, MF	
	R...241	57.11.3223	22 KOhm	1%, 0.25W, MF	
	R...242	57.11.3223	22 KOhm	1%, 0.25W, MF	
	R...243	57.11.3154	150 KOhm	1%, 0.25W, MF	
	R...250	57.11.3223	22 KOhm	1%, 0.25W, MF	
	R...251	57.11.3223	22 KOhm	1%, 0.25W, MF	
	R...252	57.11.3223	22 KOhm	1%, 0.25W, MF	
	R...253	57.11.3154	150 KOhm	1%, 0.25W, MF	
	R...260	57.11.3223	22 KOhm	1%, 0.25W, MF	
	R...261	57.11.3223	22 KOhm	1%, 0.25W, MF	
	R...262	57.11.3223	22 KOhm	1%, 0.25W, MF	
	R...263	57.11.3154	150 KOhm	1%, 0.25W, MF	
	R...270	57.11.3223	22 KOhm	1%, 0.25W, MF	
	R...271	57.11.3223	22 KOhm	1%, 0.25W, MF	
	R...272	57.11.3223	22 KOhm	1%, 0.25W, MF	
	R...273	57.11.3154	150 KOhm	1%, 0.25W, MF	
	R...280	57.11.3223	22 KOhm	1%, 0.25W, MF	
	R...281	57.11.3223	22 KOhm	1%, 0.25W, MF	
	R...282	57.11.3223	22 KOhm	1%, 0.25W, MF	
	R...283	57.11.3154	150 KOhm	1%, 0.25W, MF	
	S.....1	55.01.0168		DIP-Switch 8P	
	S.....2	55.01.0168		DIP-Switch 8P	
	S.....3	55.01.0168		DIP-Switch 8P	
	S.....4	55.01.0168		DIP-Switch 8P	
	T...130	1.022.417.00	1:3.16	Input-Transformer	ST
	T...140	1.022.417.00	1:3.16	Input-Transformer	ST
	T...150	1.022.417.00	1:3.16	Input-Transformer	ST
	T...160	1.022.417.00	1:3.16	Input-Transformer	ST
	T...170	1.022.417.00	1:3.16	Input-Transformer	ST
	T...180	1.022.417.00	1:3.16	Input-Transformer	ST
	W.....1	1.023.392.36		Flatcable 20p	
	W.....2	1.023.393.36		Flatcable 20p	
01	W.....2	1.023.392.36		Flatcable 20p	
	W.....3	1.023.391.36		Flatcable 16p	
	W.....4	1.023.391.36		Flatcable 16p	
	W.....5	1.023.391.36		Flatcable 16p	
	W.....6	1.023.391.36		Flatcable 16p	
	W.....7	1.023.391.36		Flatcable 16p	
	W.....8	1.023.391.36		Flatcable 16p	
	W.....9	1.023.392.45		Flatcable 20p	
	W....10	1.023.391.37		Flatcable 12p	

00 KG 91/08/30
01 UL 91/11/04

Input Channel 3-8 : NO. 130.- 180..
Telephon Channel : NO. 1.- 2

Mf=Metalfilm , C=Ceramic,PETP=Polyester,EL=Electrolytic,PP=Polypropylen

MANUFACTURER: Sig=Signetics, ST=Studer

END

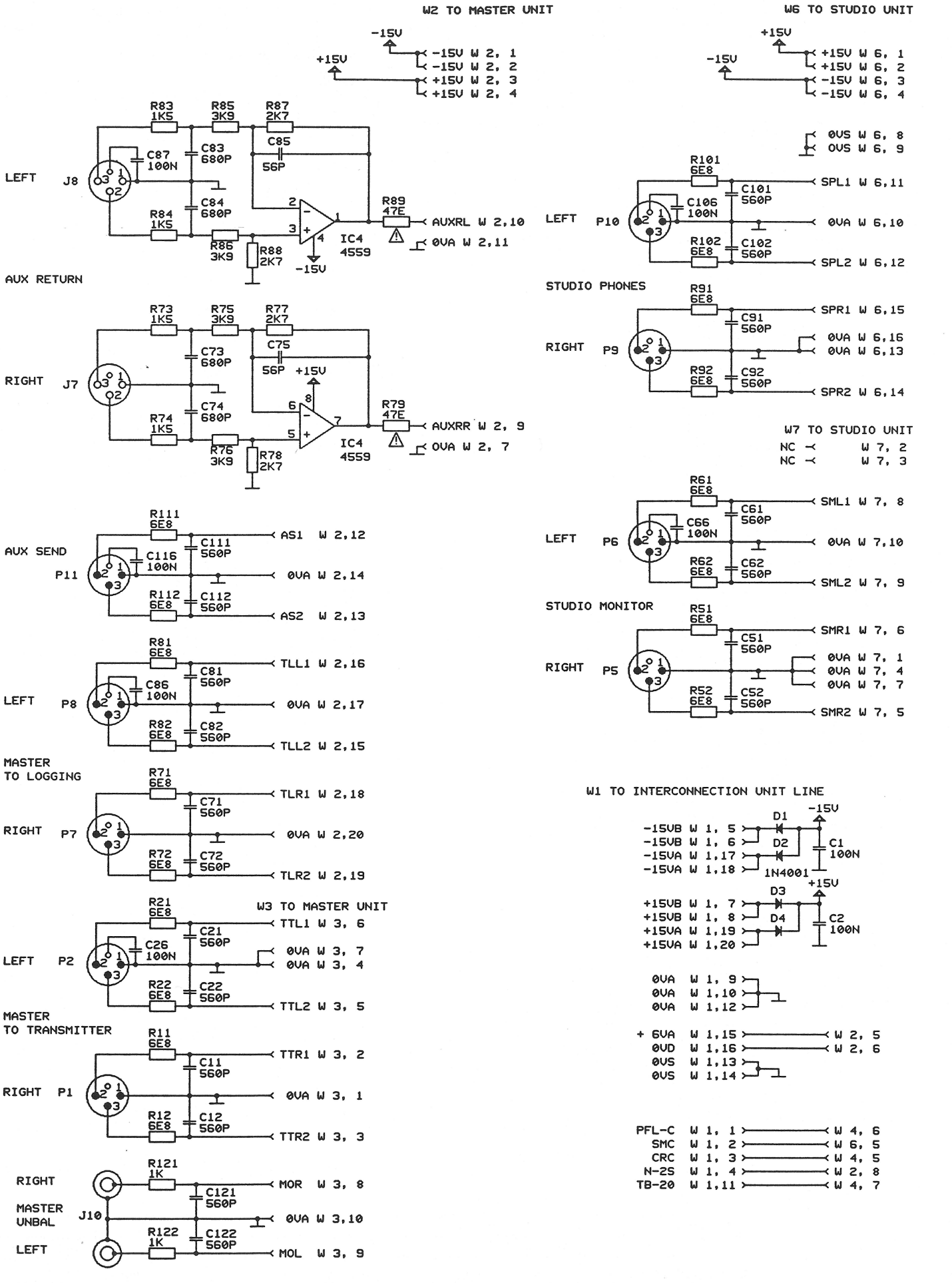
W2 TO MASTER UNIT
-15V
+15V
-15V W 2, 1
-15V W 2, 2
+15V W 2, 3
+15V W 2, 4
LEFT J8
AUX RETURN
R83 1K5
R85 3K9
R87 2K7
C87 100N
C83 680P
C85 56P
C84 680P
R84 1K5
R86 3K9
R88 2K7
IC4 4559
R89 47E
AUXRL W 2,10
0VA W 2,11
RIGHT J7
R73 1K5
R75 3K9
R77 2K7
C73 680P
C75 56P
C74 680P
R74 1K5
R76 3K9
R78 2K7
R79 47E
AUXRR W 2, 9
0VA W 2, 7
AUX SEND P11
R111 6E8
C116 100N
C111 560P
R112 6E8
C112 560P
AS1 W 2,12
0VA W 2,14
AS2 W 2,13
LEFT P8
R81 6E8
C86 100N
C81 560P
R82 6E8
C82 560P
TLL1 W 2,16
0VA W 2,17
TLL2 W 2,15
MASTER TO LOGGING
RIGHT P7
R71 6E8
C71 560P
R72 6E8
C72 560P
TLR1 W 2,18
0VA W 2,20
TLR2 W 2,19
W3 TO MASTER UNIT
LEFT P2
R21 6E8
C26 100N
C21 560P
R22 6E8
C22 560P
TTL1 W 3, 6
0VA W 3, 7
0VA W 3, 4
TTL2 W 3, 5
MASTER TO TRANSMITTER
RIGHT P1
R11 6E8
C11 560P
R12 6E8
C12 560P
TTR1 W 3, 2
0VA W 3, 1
TTR2 W 3, 3
RIGHT
MASTER UNBAL
LEFT
J10
R121 1K
C121 560P
R122 1K
C122 560P
MOR W 3, 8
0VA W 3,10
MOL W 3, 9
W6 TO STUDIO UNIT
+15V
-15V
+15V W 6, 1
+15V W 6, 2
-15V W 6, 3
-15V W 6, 4
0VS W 6, 8
0VS W 6, 9
LEFT P10
R101 6E8
C106 100N
C101 560P
R102 6E8
C102 560P
SPL1 W 6,11
0VA W 6,10
SPL2 W 6,12
STUDIO PHONES
RIGHT P9
R91 6E8
C91 560P
R92 6E8
C92 560P
SPR1 W 6,15
0VA W 6,16
0VA W 6,13
SPR2 W 6,14
W7 TO STUDIO UNIT
NC W 7, 2
NC W 7, 3
LEFT P6
R61 6E8
C66 100N
C61 560P
R62 6E8
C62 560P
SML1 W 7, 8
0VA W 7,10
SML2 W 7, 9
STUDIO MONITOR
RIGHT P5
R51 6E8
C51 560P
R52 6E8
C52 560P
SMR1 W 7, 6
0VA W 7, 1
0VA W 7, 4
0VA W 7, 7
SMR2 W 7, 5
W1 TO INTERCONNECTION UNIT LINE
-15VB W 1, 5
-15VB W 1, 6
-15VA W 1,17
-15VA W 1,18
D1
D2
1N4001
-15V
C1 100N
+15VB W 1, 7
+15VB W 1, 8
+15VA W 1,19
+15VA W 1,20
D3
D4
+15V
C2 100N
0VA W 1, 9
0VA W 1,10
0VA W 1,12
+ 6VA W 1,15
0VD W 1,16
0VS W 1,13
0VS W 1,14
W 2, 5
W 2, 6
PFL-C W 1, 1
SMC W 1, 2
CRC W 1, 3
N-2S W 1, 4
TB-20 W 1,11
W 4, 6
W 6, 5
W 4, 5
W 2, 8
W 4, 7

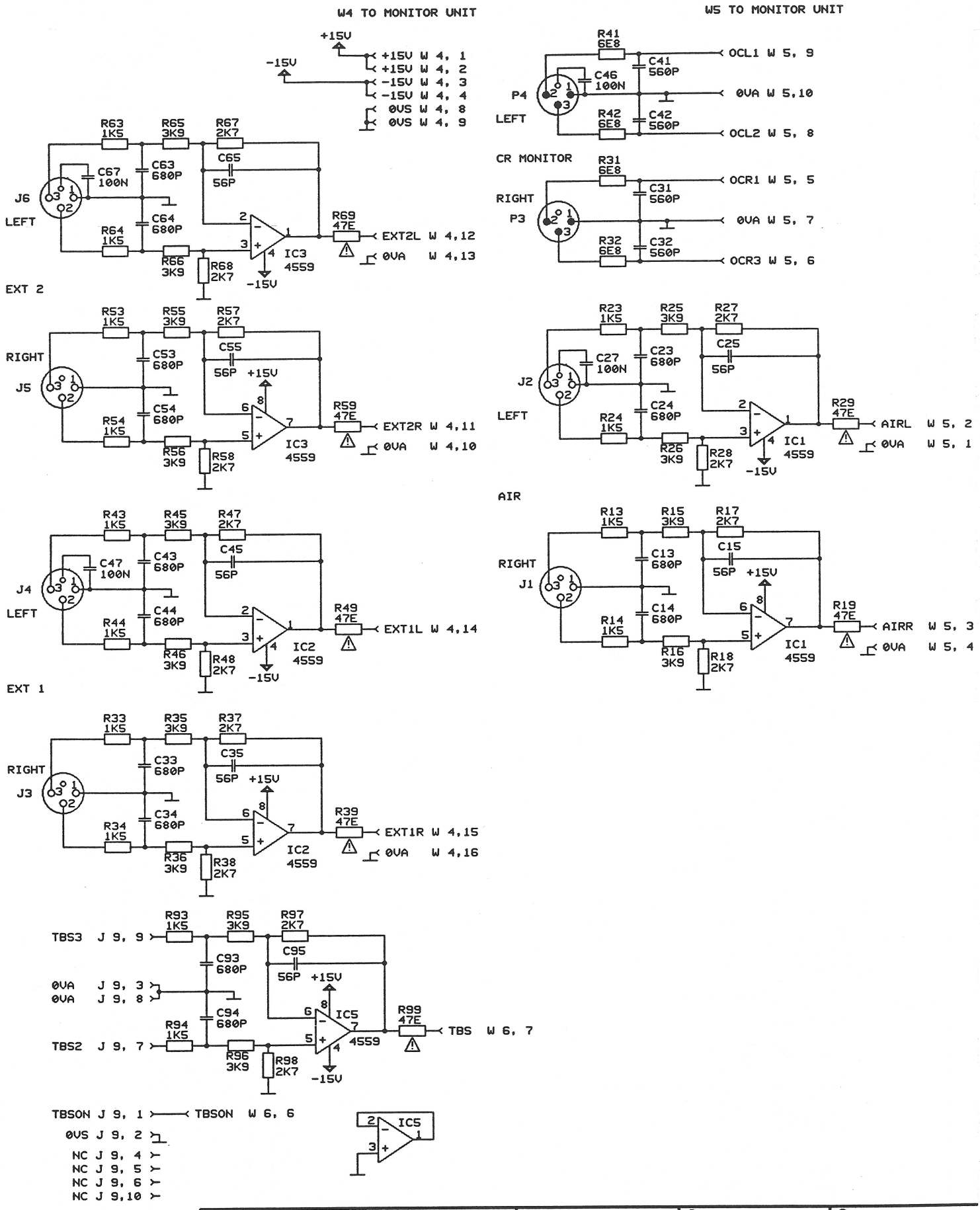

⓪ JUN-28-91 A.T.	○ SEP-12-91 UL	○	○	○
	MIXING CONSOLE MB16			PAGE 1 OF 1
REVOX	CONNECTION UNIT MASTER		SC	1.775.750.00

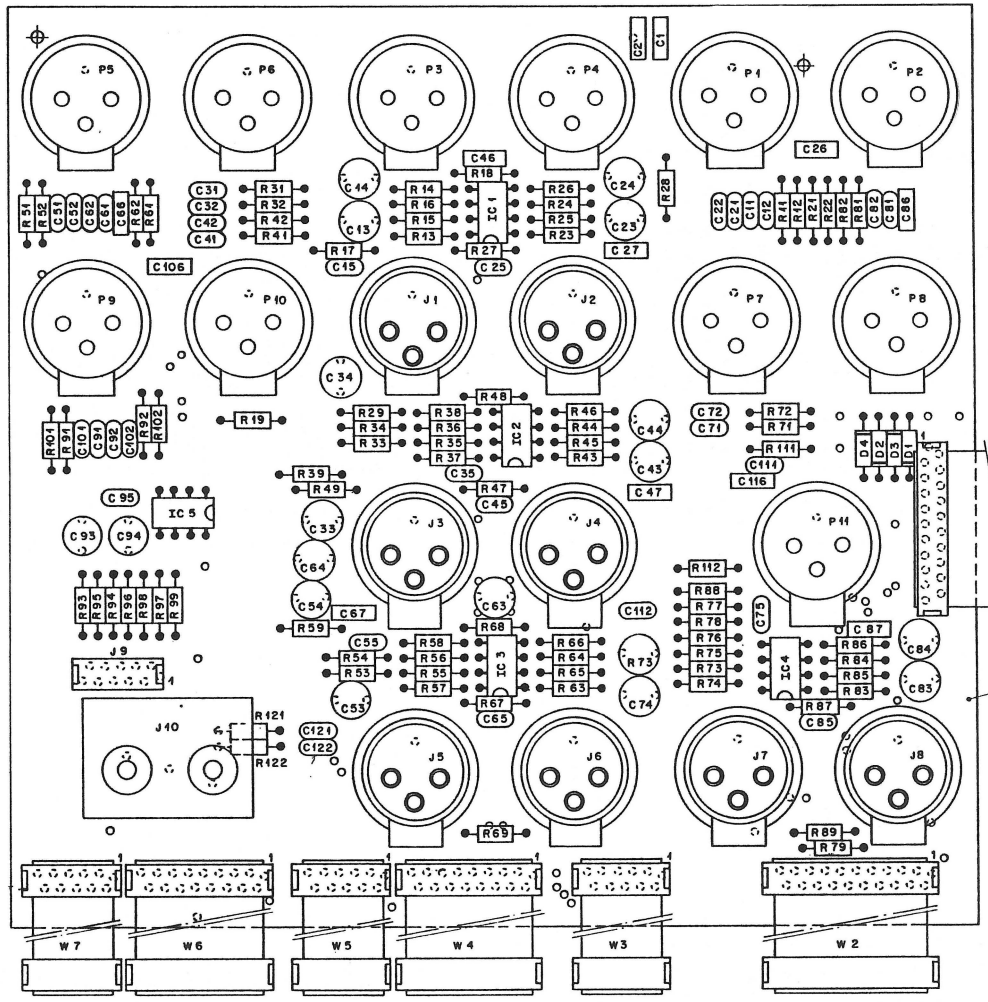

Nr. Etikette / ESE-Warnschild
aufgeklebt nach Fabrikationsmuster.

Werkstoff: Norm-Nr.: DIN-Bez.: Abmessung:		Oberfläche: Güte: Beh.:		Änderung	
Zugehörige Unterlagen: PL		Freimasstoleranz:	Maßstab: 2 : 1	Ausgabe: 28.6.91 Datum	Gez. Gepr. Ges. Index
Ersatz für:		Ersetzt durch:		Kopie für:	
STUDER REGENSDORF ZÜRICH	Benennung: CONNECTION UNIT MASTER ESE			Nummer: 1.775.750-00	

1.775.750.00 CONNECTION UNIT MASTER

Ad	..Pos..	...Ref.No...	Description	
	C.....1	59.06.0104	100 nF	10%, 25V, PETP
	C.....2	59.06.0104	100 nF	10%, 25V, PETP
	C....11	59.45.5561	560 pF	5%, 63V, C
	C....12	59.45.5561	560 pF	5%, 63V, C
	C....13	59.05.1681	680 pF	1%, 25V, C
	C....14	59.05.1681	680 pF	1%, 25V, C
	C....15	59.34.4560	56 pF	5%, 25V, C
	C....21	59.45.5561	560 pF	5%, 63V, C
	C....22	59.45.5561	560 pF	5%, 63V, C
	C....23	59.05.1681	680 pF	1%, 25V, C
	C....24	59.05.1681	680 pF	1%, 25V, C
	C....25	59.34.4560	56 pF	5%, 25V, C
	C....26	59.06.0104	100 nF	10%, 25V, PETP
	C....27	59.06.0104	100 nF	10%, 25V, PETP
	C....31	59.45.5561	560 pF	5%, 63V, C
	C....32	59.45.5561	560 pF	5%, 63V, C
	C....33	59.05.1681	680 pF	1%, 25V, C
	C....34	59.05.1681	680 pF	1%, 25V, C
	C....35	59.34.4560	56 pF	5%, 25V, C
	C....41	59.45.5561	560 pF	5%, 63V, C
	C....42	59.45.5561	560 pF	5%, 63V, C
	C....43	59.05.1681	680 pF	1%, 25V, C
	C....44	59.05.1681	680 pF	1%, 25V, C
	C....45	59.34.4560	56 pF	5%, 25V, C
	C....46	59.06.0104	100 nF	10%, 25V, PETP
	C....47	59.06.0104	100 nF	10%, 25V, PETP
	C....51	59.45.5561	560 pF	5%, 63V, C
	C....52	59.45.5561	560 pF	5%, 63V, C
	C....53	59.05.1681	680 pF	1%, 25V, C
	C....54	59.05.1681	680 pF	1%, 25V, C
	C....55	59.34.4560	56 pF	5%, 25V, C
	C....61	59.45.5561	560 pF	5%, 63V, C
	C....62	59.45.5561	560 pF	5%, 63V, C
	C....63	59.05.1681	680 pF	1%, 25V, C
	C....64	59.05.1681	680 pF	1%, 25V, C
	C....65	59.34.4560	56 pF	5%, 25V, C
	C....66	59.06.0104	100 nF	10%, 25V, PETP
	C....67	59.06.0104	100 nF	10%, 25V, PETP
	C....71	59.45.5561	560 pF	5%, 63V, C
	C....72	59.45.5561	560 pF	5%, 63V, C
	C....73	59.05.1681	680 pF	1%, 25V, C
	C....74	59.05.1681	680 pF	1%, 25V, C
	C....75	59.34.4560	56 pF	5%, 25V, C
	C....81	59.45.5561	560 pF	5%, 63V, C
	C....82	59.45.5561	560 pF	5%, 63V, C
	C....83	59.05.1681	680 pF	1%, 25V, C
	C....84	59.05.1681	680 pF	1%, 25V, C
	C....85	59.34.4560	56 pF	5%, 25V, C
	C....86	59.06.0104	100 nF	10%, 25V, PETP
	C....87	59.06.0104	100 nF	10%, 25V, PETP
	C....91	59.45.5561	560 pF	5%, 63V, C
	C....92	59.45.5561	560 pF	5%, 63V, C
	C....93	59.05.1681	680 pF	1%, 25V, C
	C....94	59.05.1681	680 pF	1%, 25V, C
	C....95	59.34.4560	56 pF	5%, 25V, C
	C...101	59.45.5561	560 pF	5%, 63V, C
	C...102	59.45.5561	560 pF	5%, 63V, C
	C...106	59.06.0104	100 nF	10%, 25V, PETP
	C...111	59.45.5561	560 pF	5%, 63V, C
	C...112	59.45.5561	560 pF	5%, 63V, C
	C...116	59.06.0104	100 nF	10%, 25V, PETP
	C...121	59.45.5561	560 pF	5%, 63V, C
	C...122	59.45.5561	560 pF	5%, 63V, C
	D.....1	50.04.0105	1N4004	D041,RECTIFIER
	D.....2	50.04.0105	1N4004	D041,RECTIFIER
	D.....3	50.04.0105	1N4004	D041,RECTIFIER
	D.....4	50.04.0105	1N4004	D041,RECTIFIER
	IC....1	50.09.0107	RC4559	
	IC....2	50.09.0107	RC4559	
	IC....3	50.09.0107	RC4559	
	IC....4	50.09.0107	RC4559	
	IC....5	50.09.0107	RC4559	
	J.....1	54.21.2002		XLR Jack Print
	J.....2	54.21.2002		XLR Jack Print
	J.....3	54.21.2002		XLR Jack Print
	J.....4	54.21.2002		XLR Jack Print
	J.....5	54.21.2002		XLR Jack Print
	J.....6	54.21.2002		XLR Jack Print
	J.....7	54.21.2002		XLR Jack Print
	J.....8	54.21.2002		XLR Jack Print
	J.....9	54.14.5510		AMP 10P Micro Match
	J....10	54.21.2012		Cinch Jack 2 p
	MP....1	1.775.750.11		Connection UNIT MASTER PCB
01	MP....1	1.775.750.11	Index 1	Connection UNIT MASTER PCB
	P.....1	54.21.2001		XLR Plug Print
	P.....2	54.21.2001		XLR Plug Print
	P.....3	54.21.2001		XLR Plug Print
	P.....4	54.21.2001		XLR Plug Print
	P.....5	54.21.2001		XLR Plug Print
	P.....6	54.21.2001		XLR Plug Print
	P.....7	54.21.2001		XLR Plug Print
	P.....8	54.21.2001		XLR Plug Print
	P.....9	54.21.2001		XLR Plug Print
	P....10	54.21.2001		XLR Plug Print
	P....11	54.21.2001		XLR Plug Print
	R....11	57.11.3689	6.8 Ohm	1%, 0.25W, MF
	R....12	57.11.3689	6.8 Ohm	1%, 0.25W, MF
	R....13	57.11.3152	1.5 KOhm	1%, 0.25W, MF
	R....14	57.11.3152	1.5 KOhm	1%, 0.25W, MF
	R....15	57.11.3392	3.9 KOhm	1%, 0.25W, MF
	R....16	57.11.3392	3.9 KOhm	1%, 0.25W, MF
	R....17	57.11.3272	2.7 KOhm	1%, 0.25W, MF
	R....18	57.11.3272	2.7 KOhm	1%, 0.25W, MF
	R....19	57.19.0470	47 Ohm	5%, 0.25W, MF Fusible Resistor!
	R....21	57.11.3689	6.8 Ohm	1%, 0.25W, MF
	R....22	57.11.3689	6.8 Ohm	1%, 0.25W, MF
	R....23	57.11.3152	1.5 KOhm	1%, 0.25W, MF
	R....24	57.11.3152	1.5 KOhm	1%, 0.25W, MF
	R....25	57.11.3392	3.9 KOhm	1%, 0.25W, MF
	R....26	57.11.3392	3.9 KOhm	1%, 0.25W, MF
	R....27	57.11.3272	2.7 KOhm	1%, 0.25W, MF
	R....28	57.11.3272	2.7 KOhm	1%, 0.25W, MF
	R....29	57.19.0470	47 Ohm	5%, 0.25W, MF Fusible Resistor!
	R....31	57.11.3689	6.8 Ohm	1%, 0.25W, MF
	R....32	57.11.3689	6.8 Ohm	1%, 0.25W, MF
	R....33	57.11.3152	1.5 KOhm	1%, 0.25W, MF
	R....34	57.11.3152	1.5 KOhm	1%, 0.25W, MF
	R....35	57.11.3392	3.9 KOhm	1%, 0.25W, MF
	R....36	57.11.3392	3.9 KOhm	1%, 0.25W, MF
	R....37	57.11.3272	2.7 KOhm	1%, 0.25W, MF
	R....38	57.11.3272	2.7 KOhm	1%, 0.25W, MF
	R....39	57.19.0470	47 Ohm	5%, 0.25W, MF Fusible Resistor!
	R....41	57.11.3689	6.8 Ohm	1%, 0.25W, MF
	R....42	57.11.3689	6.8 Ohm	1%, 0.25W, MF
	R....43	57.11.3152	1.5 KOhm	1%, 0.25W, MF
	R....44	57.11.3152	1.5 KOhm	1%, 0.25W, MF
	R....45	57.11.3392	3.9 KOhm	1%, 0.25W, MF
	R....46	57.11.3392	3.9 KOhm	1%, 0.25W, MF
	R....47	57.11.3272	2.7 KOhm	1%, 0.25W, MF
	R....48	57.11.3272	2.7 KOhm	1%, 0.25W, MF
	R....49	57.19.0470	47 Ohm	5%, 0.25W, MF Fusible Resistor!
	R....51	57.11.3689	6.8 Ohm	1%, 0.25W, MF
	R....52	57.11.3689	6.8 Ohm	1%, 0.25W, MF
	R....53	57.11.3152	1.5 KOhm	1%, 0.25W, MF
	R....54	57.11.3152	1.5 KOhm	1%, 0.25W, MF
	R....55	57.11.3392	3.9 KOhm	1%, 0.25W, MF
	R....56	57.11.3392	3.9 KOhm	1%, 0.25W, MF
	R....57	57.11.3272	2.7 KOhm	1%, 0.25W, MF
	R....58	57.11.3272	2.7 KOhm	1%, 0.25W, MF
	R....59	57.19.0470	47 Ohm	5%, 0.25W, MF Fusible Resistor!
	R....61	57.11.3689	6.8 Ohm	1%, 0.25W, MF
	R....62	57.11.3689	6.8 Ohm	1%, 0.25W, MF
	R....63	57.11.3152	1.5 KOhm	1%, 0.25W, MF
	R....64	57.11.3152	1.5 KOhm	1%, 0.25W, MF
	R....65	57.11.3392	3.9 KOhm	1%, 0.25W, MF
	R....66	57.11.3392	3.9 KOhm	1%, 0.25W, MF
	R....67	57.11.3272	2.7 KOhm	1%, 0.25W, MF
	R....68	57.11.3272	2.7 KOhm	1%, 0.25W, MF
	R....69	57.19.0470	47 Ohm	5%, 0.25W, MF Fusible Resistor!
	R....71	57.11.3689	6.8 Ohm	1%, 0.25W, MF
	R....72	57.11.3689	6.8 Ohm	1%, 0.25W, MF
	R....73	57.11.3152	1.5 KOhm	1%, 0.25W, MF
	R....74	57.11.3152	1.5 KOhm	1%, 0.25W, MF
	R....75	57.11.3392	3.9 KOhm	1%, 0.25W, MF
	R....76	57.11.3392	3.9 KOhm	1%, 0.25W, MF
	R....77	57.11.3272	2.7 KOhm	1%, 0.25W, MF
	R....78	57.11.3272	2.7 KOhm	1%, 0.25W, MF
	R....79	57.19.0470	47 Ohm	5%, 0.25W, MF Fusible Resistor!
	R....81	57.11.3689	6.8 Ohm	1%, 0.25W, MF
	R....82	57.11.3689	6.8 Ohm	1%, 0.25W, MF
	R....83	57.11.3152	1.5 KOhm	1%, 0.25W, MF
	R....84	57.11.3152	1.5 KOhm	1%, 0.25W, MF
	R....85	57.11.3392	3.9 KOhm	1%, 0.25W, MF
	R....86	57.11.3392	3.9 KOhm	1%, 0.25W, MF
	R....87	57.11.3272	2.7 KOhm	1%, 0.25W, MF
	R....88	57.11.3272	2.7 KOhm	1%, 0.25W, MF
	R....89	57.19.0470	47 Ohm	5%, 0.25W, MF Fusible Resistor!
	R....91	57.11.3689	6.8 Ohm	1%, 0.25W, MF
	R....92	57.11.3689	6.8 Ohm	1%, 0.25W, MF
	R....93	57.11.3152	1.5 KOhm	1%, 0.25W, MF
	R....94	57.11.3152	1.5 KOhm	1%, 0.25W, MF
	R....95	57.11.3392	3.9 KOhm	1%, 0.25W, MF
	R....96	57.11.3392	3.9 KOhm	1%, 0.25W, MF
	R....97	57.11.3272	2.7 KOhm	1%, 0.25W, MF
	R....98	57.11.3272	2.7 KOhm	1%, 0.25W, MF
	R....99	57.19.0470	47 Ohm	5%, 0.25W, MF Fusible Resistor!
	R...101	57.11.3689	6.8 Ohm	1%, 0.25W, MF
	R...102	57.11.3689	6.8 Ohm	1%, 0.25W, MF
	R...111	57.11.3689	6.8 Ohm	1%, 0.25W, MF
	R...112	57.11.3689	6.8 Ohm	1%, 0.25W, MF
	R...121	57.11.3102	1 KOhm	1%, 0.25W, MF
	R...122	57.11.3102	1 KOhm	1%, 0.25W, MF
	W.....1	1.023.392.10	20 pol	Flatcable
	W.....2	1.023.392.36	20 pol	Flatcable
	W.....3	1.023.390.36	10 pol	Flatcable
	W.....4	1.023.391.36	16 pol	Flatcable
	W.....5	1.023.390.36	10 pol	Flatcable
	W.....6	1.023.391.36	16 pol	Flatcable
	W.....7	1.023.390.36	10 pol	Flatcable

00 KG 91/08/27
01 UL 91/11/04

Mf=Metalfilm, C=Ceramic,PETP=Polyester,EL=Electrolytic,PP=Polypropylen
MANUFACTURER: Sig=Signetics, ST=Studer
END

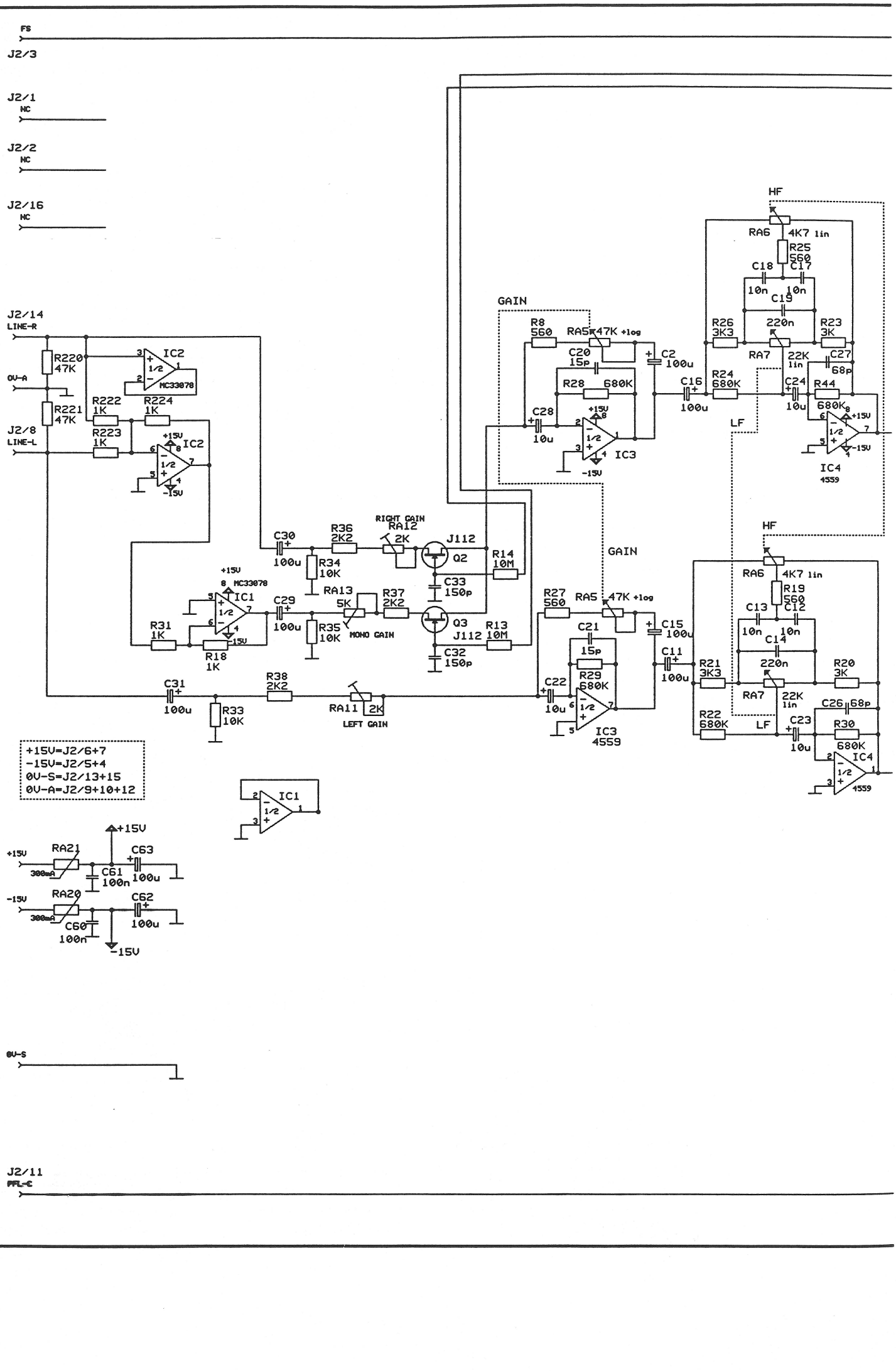
FS
J2/3
J2/1
NC
J2/2
NC
J2/16
NC
J2/14
LINE-R
0V-A
J2/8
LINE-L
R220 47K
R221 47K
R222 1K
R223 1K
R224 1K
IC2
MC33078
+15V
-15V
C30 100u
R36 2K2
RIGHT GAIN
RA12 2K
J112
Q2
R14 10M
R34 10K
C33 150p
RA13 5K
R37 2K2
MONO GAIN
R35 10K
C29 100u
R31 1K
R18 1K
IC1
Q3
J112
R13 10M
C32 150p
C31 100u
R38 2K2
R33 10K
RA11 2K
LEFT GAIN
GAIN
R8 560
RA5 47K +log
C20 15p
R28 680K
C28 10u
IC3
C2 100u
C16 100u
HF
RA6 4K7 lin
R25 560
C18 10n
C17 10n
C19 220n
R26 3K3
R23 3K
RA7 22K lin
C27 68p
R24 680K
C24 10u
R44 680K
LF
IC4
4559
R27 560
C21 15p
R29 680K
C22 10u
C15 100u
C11 100u
R21 3K3
R20 3K
R22 680K
C13 10n
C12 10n
C14 10n
C26 68p
C23 10u
R30 680K
+15V=J2/6+7
-15V=J2/5+4
0V-S=J2/13+15
0V-A=J2/9+10+12
RA21
C63 100u
C61 100n
RA20
C62 100u
C60 100n
300mA
0V-S
J2/11
PFL-C

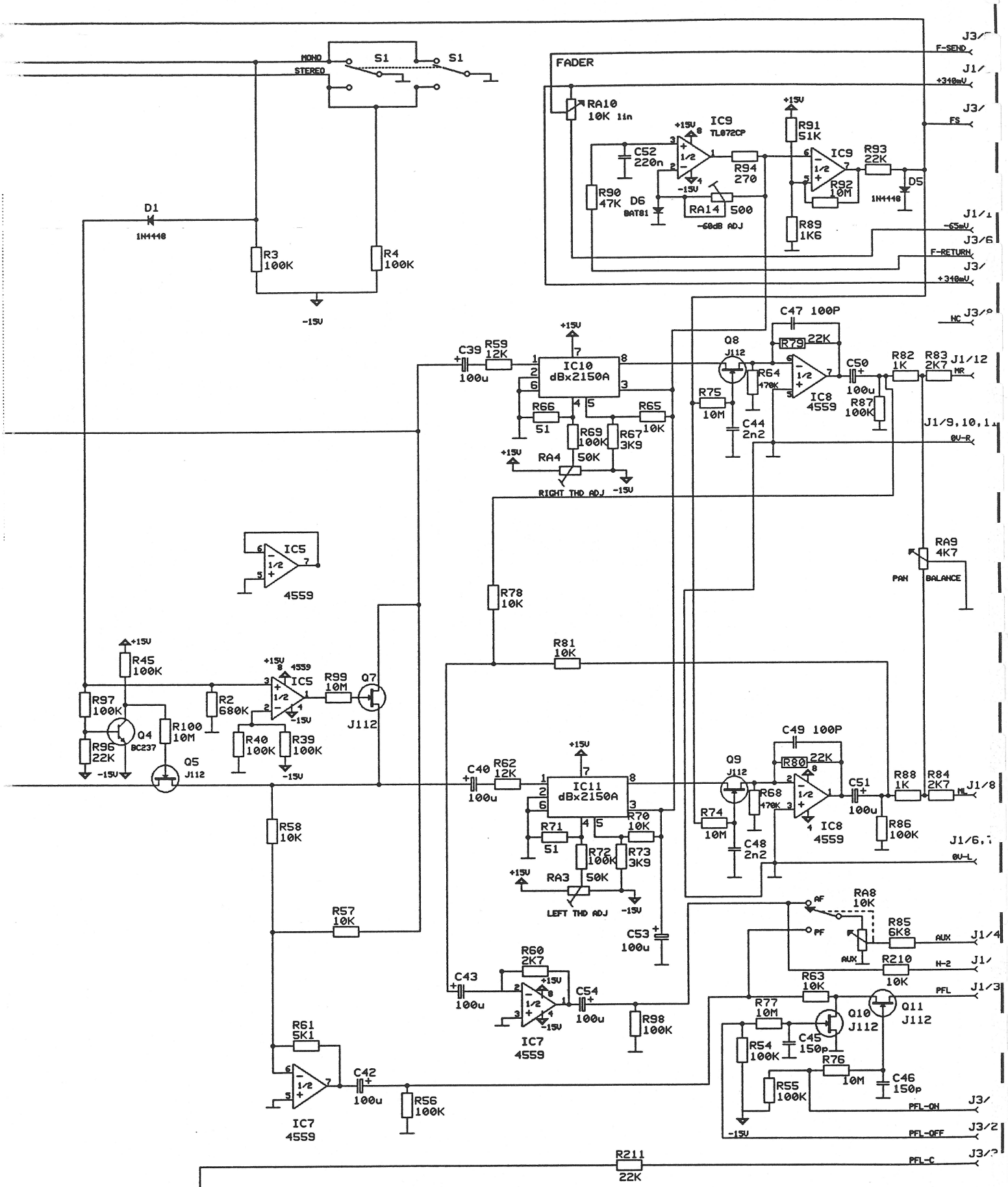

⓪ JUL-08-91 MJ	○ SEP-12-91 UL	○	○	○
	MIXING CONSOLE MB16			PAGE 1 OF 1
REVOX	INPUT UNIT LINE-EQUALIZER		SC	1.775.800.00

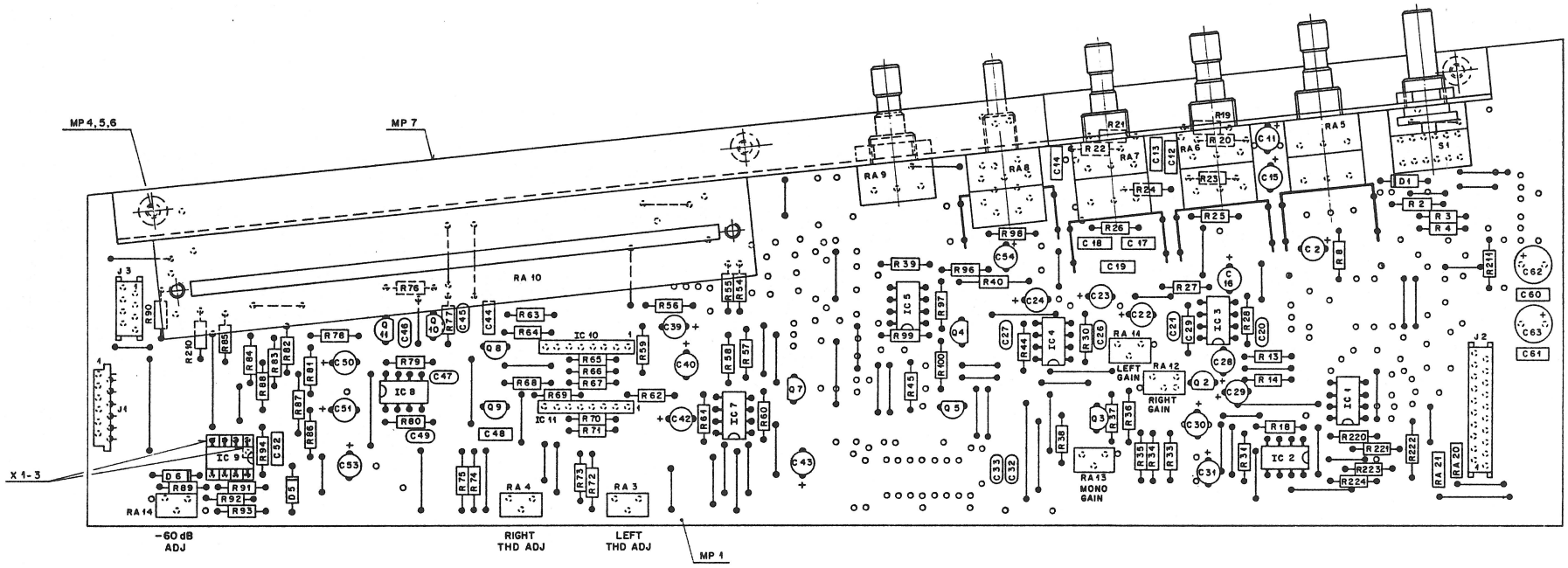

Nr. Etikette / ESE-Warnschild aufgeklebt nach Fabrikationsmuster.

Werkstoff: Norm-Nr.: / DIN-Bez.: / Abmessung:	Oberfläche: Güte: / Beh.:		Änderung:
Zugehörige Unterlagen: PL	Freimasstoleranz: ±	Maßstab: 2:1	Ausgabe / Datum: 15.6.91 Gez. Gepr. Ges. Index: (1) (1) (1)
Ersatz für:	Ersetzt durch:		Kopie für:
STUDER REGENSDORF ZÜRICH	Benennung: INPUT UNIT LINE EQUALIZER ESE		Nummer: 1.775.800-00

1.775.800.00 INPUT UNIT LINE EQUALIZER

Ad	..Pos..	...Ref.No...	Description			
	C.....2	59.22.3101	100 uF	-20%, 10V,	EL	
	C....11	59.22.3101	100 uF	-20%, 10V,	EL	
	C....12	59.06.5103	10 nF	10%, 25V,	PETP	
	C....13	59.06.5103	10 nF	10%, 25V,	PETP	
	C....14	59.06.5224	220 nF	10%, 25V,	PETP	
	C....15	59.22.3101	100 uF	-20%, 10V,	EL	
	C....16	59.22.3101	100 uF	-20%, 10V,	EL	
	C....17	59.06.5103	10 nF	10%, 25V,	PETP	
	C....18	59.06.5103	10 nF	10%, 25V,	PETP	
	C....19	59.06.5224	220 nF	10%, 25V,	PETP	
	C....20	59.34.1150	15 pF	10%, 25V,	C	
	C....21	59.34.1150	15 pF	10%, 25V,	C	
	C....22	59.22.6100	10 uF	-20%, 10V,	EL	
	C....23	59.22.6100	10 uF	-20%, 10V,	EL	
	C....24	59.22.6100	10 uF	-20%, 10V,	EL	
	C....26	59.34.4680	68 pF	10%, 25V,	C	
	C....27	59.34.4680	68 pF	10%, 25V,	C	
	C....28	59.22.6100	10 uF	-20%, 10V,	EL	
	C....29	59.22.3101	100 uF	-20%, 10V,	EL	
	C....30	59.22.3101	100 uF	-20%, 10V,	EL	
	C....31	59.22.3101	100 uF	-20%, 10V,	EL	
	C....32	59.34.4151	150 pF	10%, 25V,	C	
	C....33	59.34.4151	150 pF	10%, 25V,	C	
	C....39	59.22.3101	100 uF	-20%, 10V,	EL	
	C....40	59.22.3101	100 uF	-20%, 10V,	EL	
	C....42	59.22.3101	100 uF	-20%, 10V,	EL	
	C....43	59.22.3101	100 uF	-20%, 10V,	EL	
	C....44	59.06.0222	2.2 nF	10%, 25V,	PETP	
	C....45	59.34.4151	150 pF	10%, 25V,	C	
	C....46	59.34.4151	150 pF	10%, 25V,	C	
	C....47	59.34.4101	100 pF	10%, 25V,	C	
	C....48	59.06.0222	2.2 nF	10%, 25V,	PETP	
	C....49	59.34.4101	100 pF	10%, 25V,	C	
	C....50	59.22.3101	100 uF	-20%, 10V,	EL	
	C....51	59.22.3101	100 uF	-20%, 10V,	EL	
	C....52	59.06.5224	220 nF	10%, 25V,	PETP	
	C....53	59.22.3101	100 uF	-20%, 10V,	EL	
	C....54	59.22.3101	100 uF	-20%, 10V,	EL	
	C....60	59.06.0104	100 nF	10%, 25V,	PETP	
	C....61	59.06.0104	100 nF	10%, 25V,	PETP	
	C....62	59.22.5101	100 uF	-20%, 25V,	EL	
	C....63	59.22.5101	100 uF	-20%, 25V,	EL	
	D.....1	50.04.0125	1N 4448	any		
	D.....5	50.04.0125	1N 4448	any		
	D.....6	50.04.0523	BAT 81	Schottky-Diode		
	IC....1	50.09.0117	MC33078P			Mot
	IC....2	50.09.0117	MC33078P			Mot
	IC....3	50.09.0107	RC4559			Ra
	IC....4	50.09.0107	RC4559			Ra
	IC....5	50.09.0107	RC4559			Ra
	IC....7	50.09.0107	RC4559			Ra
	IC....8	50.09.0107	RC4559			Ra
	IC....9	50.09.0101	TL072CP			TI
	IC...10	50.11.0140	dbx2150A	VCA		dbx
	IC...11	50.11.0140	dbx2150A	VCA		dbx
	J.....1	54.14.5532	12-Pole	Winkelbuchsensteckerprint	Micro-M	
	J.....2	54.14.5516	16-Pole	Buchsenstecker	Micro-M	
	J.....3	54.14.5508	8-Pole	Buchsenstecker	Micro-M	
	MP....1	1.775.800.11		INPUT PCB		
01	MP....1	1.775.800.12		INPUT PCB		
	MP....4	21.38.1352		Screw		
	MP....5	21.38.1352		Screw		
	MP....6	21.38.1352		Screw		
	MP....7	1.775.370.20		U-Profile		
	Q.....2	50.03.0350	J 112	FET		Mot
	Q.....3	50.03.0350	J 112	FET		Mot
	Q.....4	50.03.0436	BC 237	NPN		Mot
	Q.....5	50.03.0350	J 112	FET		Mot
	Q.....7	50.03.0350	J 112	FET		Mot
	Q.....8	50.03.0350	J 112	FET		Mot
	Q.....9	50.03.0350	J 112	FET		Mot
	Q....10	50.03.0350	J 112	FET		Mot
	Q....11	50.03.0350	J 112	FET		Mot
	R.....2	57.11.3684	680 KOhm	1%, 0.25W, MF		
	R.....3	57.11.3104	100 KOhm	1%, 0.25W, MF		
	R.....4	57.11.3104	100 KOhm	1%, 0.25W, MF		
	R.....8	57.11.3561	560 Ohm	1%, 0.25W, MF		
	R....13	57.11.5106	10 MOhm	1%, 0.25W, MF		
	R....14	57.11.5106	10 MOhm	5%, 0.25W, MF		
	R....18	57.11.3102	1 KOhm	1%, 0.25W, MF		
	R....19	57.11.3561	560 Ohm	1%, 0.25W, MF		
	R....20	57.11.3302	3 KOhm	1%, 0.25W, MF		
	R....21	57.11.3332	3.3 KOhm	1%, 0.25W, MF		
	R....22	57.11.3684	680 KOhm	1%, 0.25W, MF		
	R....23	57.11.3302	3 KOhm	1%, 0.25W, MF		
	R....24	57.11.3684	680 KOhm	1%, 0.25W, MF		
	R....25	57.11.3561	560 Ohm	1%, 0.25W, MF		
	R....26	57.11.3332	3.3 KOhm	1%, 0.25W, MF		
	R....27	57.11.3561	560 Ohm	1%, 0.25W, MF		
	R....28	57.11.3684	680 KOhm	1%, 0.25W, MF		
	R....29	57.11.3684	680 KOhm	1%, 0.25W, MF		
	R....30	57.11.3684	680 KOhm	1%, 0.25W, MF		
	R....31	57.11.3102	1 KOhm	1%, 0.25W, MF		
	R....33	57.11.3103	10 KOhm	1%, 0.25W, MF		
	R....34	57.11.3103	10 KOhm	1%, 0.25W, MF		
	R....35	57.11.3103	10 KOhm	1%, 0.25W, MF		
	R....36	57.11.3222	2.2 KOhm	1%, 0.25W, MF		
	R....37	57.11.3222	2.2 KOhm	1%, 0.25W, MF		
	R....38	57.11.3222	2.2 KOhm	1%, 0.25W, MF		
	R....39	57.11.3104	100 KOhm	1%, 0.25W, MF		
	R....40	57.11.3104	100 KOhm	1%, 0.25W, MF		
	R....44	57.11.3684	680 KOhm	1%, 0.25W, MF		
	R....45	57.11.3104	100 KOhm	1%, 0.25W, MF		
	R....54	57.11.3104	100 KOhm	1%, 0.25W, MF		
	R....55	57.11.3104	100 KOhm	1%, 0.25W, MF		
	R....56	57.11.3104	100 KOhm	1%, 0.25W, MF		
	R....57	57.11.3103	10 KOhm	1%, 0.25W, MF		
	R....58	57.11.3103	10 KOhm	1%, 0.25W, MF		
	R....59	57.11.3123	12 KOhm	1%, 0.25W, MF		
	R....60	57.11.3272	2.7 KOhm	1%, 0.25W, MF		
	R....61	57.11.3512	5.1 KOhm	1%, 0.25W, MF		
	R....62	57.11.3123	12 KOhm	1%, 0.25W, MF		
	R....63	57.11.3103	10 KOhm	1%, 0.25W, MF		
	R....64	57.11.3474	470 KOhm	1%, 0.25W, MF		
	R....65	57.11.3103	10 KOhm	1%, 0.25W, MF		
	R....66	57.11.3510	51 Ohm	1%, 0.25W, MF		
	R....67	57.11.3392	3.9 KOhm	1%, 0.25W, MF		
	R....68	57.11.3474	470 KOhm	1%, 0.25W, MF		
	R....69	57.11.3104	100 KOhm	1%, 0.25W, MF		
	R....70	57.11.3103	10 KOhm	1%, 0.25W, MF		
	R....71	57.11.3510	51 Ohm	1%, 0.25W, MF		
	R....72	57.11.3104	100 kOhm	1%, 0.25W, MF		
	R....73	57.11.3392	3.9 KOhm	1%, 0.25W, MF		
	R....74	57.11.5106	10 MOhm	5%, 0.25W, MF		
	R....75	57.11.5106	10 MOhm	5%, 0.25W, MF		
	R....76	57.11.5106	10 MOhm	5%, 0.25W, MF		
	R....77	57.11.5106	10 MOhm	5%, 0.25W, MF		
	R....78	57.11.3103	10 KOhm	1%, 0.25W, MF		
	R....79	57.11.3223	22 KOhm	1%, 0.25W, MF		
	R....80	57.11.3223	22 KOhm	1%, 0.25W, MF		
	R....81	57.11.3103	10 KOhm	1%, 0.25W, MF		
	R....82	57.11.3102	1 KOhm	1%, 0.25W, MF		
	R....83	57.11.3272	2.7 KOhm	1%, 0.25W, MF		
	R....84	57.11.3272	2.7 KOhm	1%, 0.25W, MF		
	R....85	57.11.3682	6.8 KOhm	1%, 0.25W, MF		
	R....86	57.11.3104	100 KOhm	1%, 0.25W, MF		
	R....87	57.11.3104	100 KOhm	1%, 0.25W, MF		
	R....88	57.11.3102	1 KOhm	1%, 0.25W, MF		
	R....89	57.11.3162	1.6 KOhm	1%, 0.25W, MF		
	R....90	57.11.3473	47 KOhm	1%, 0.25W, MF		
	R....91	57.11.3513	51 KOhm	1%, 0.25W, MF		
	R....92	57.11.5106	10 MOhm	5%, 0.25W, MF		
	R....93	57.11.3223	22 KOhm	1%, 0.25W, MF		
	R....94	57.11.3271	270 Ohm	1%, 0.25W, MF		
	R....96	57.11.3223	22 KOhm	1%, 0.25W, MF		
	R....97	57.11.3104	100 KOhm	1%, 0.25W, MF		
	R....98	57.11.3104	100 KOhm	1%, 0.25W, MF		
	R....99	57.11.5106	10 MOhm	5%, 0.25W, MF		
	R...100	57.11.5106	10 MOhm	5%, 0.25W, MF		
	R...210	57.11.3103	10 KOhm	1%, 0.25W, MF		
	R...211	57.11.3223	22 KOhm	1%, 0.25W, MF		
	R...220	57.11.3473	47 KOhm	1%, 0.25W, MF		
	R...221	57.11.3473	47 KOhm	1%, 0.25W, MF		
	R...222	57.11.3102	1 KOhm	1%, 0.25W, MF		
	R...223	57.11.3102	1 KOhm	1%, 0.25W, MF		
	R...224	57.11.3102	1 KOhm	1%, 0.25W, MF		
	RA....3	58.01.9503	50 KOhm	10%, 0.50W, C		
	RA....4	58.01.9503	50 KOhm	10%, 0.50W, C		
	RA....5	1.775.800.02	2*47 KOhm	pos.log		
	RA....6	1.775.800.03	2*4.7KOhm	lin.		
	RA....7	1.775.800.04	2* 22KOhm	lin.		
	RA....8	1.369.150.03	1* 10KOhm	pos.log + Switch 1*2u		
	RA....9	1.775.330.06	1*4.7KOhm	lin.		
	RA...10	1.775.330.07	1* 10KOhm	lin. Fader		
	RA...11	58.01.9202	2 KOhm	10%, 0.50W, C		
	RA...12	58.01.9202	2 KOhm	10%, 0.50W, C		
	RA...13	58.01.9502	5 KOhm	10%, 0.50W, C		
	RA...14	58.01.9501	500 Ohm	10%, 0.50W, C		
	RA...20	57.92.7012	PTC 300	mA 60V		
	RA...21	57.92.7012	PTC 300	mA 60V		
	S.....1	1.775.800.01	Switch	1Step/2Pos.		
	X.....1	53.03.0218	4-pole	Socket		
	X.....2	53.03.0218	4-pole	Socket		
	X.....3	53.03.0218	1-pole	Socket		

00 KG 91/08/22
01 UL 91/11/04

EL=Electrolytic,C=Ceramic, PETP=Polyester

MF=Metal Film

MANUFACTURER: dbx=dbx Incorparated,NS=National Semiconductor,Mot=Motorola
RA=Raytheon,SIG=Signetics,TI=Texas Instruments

END

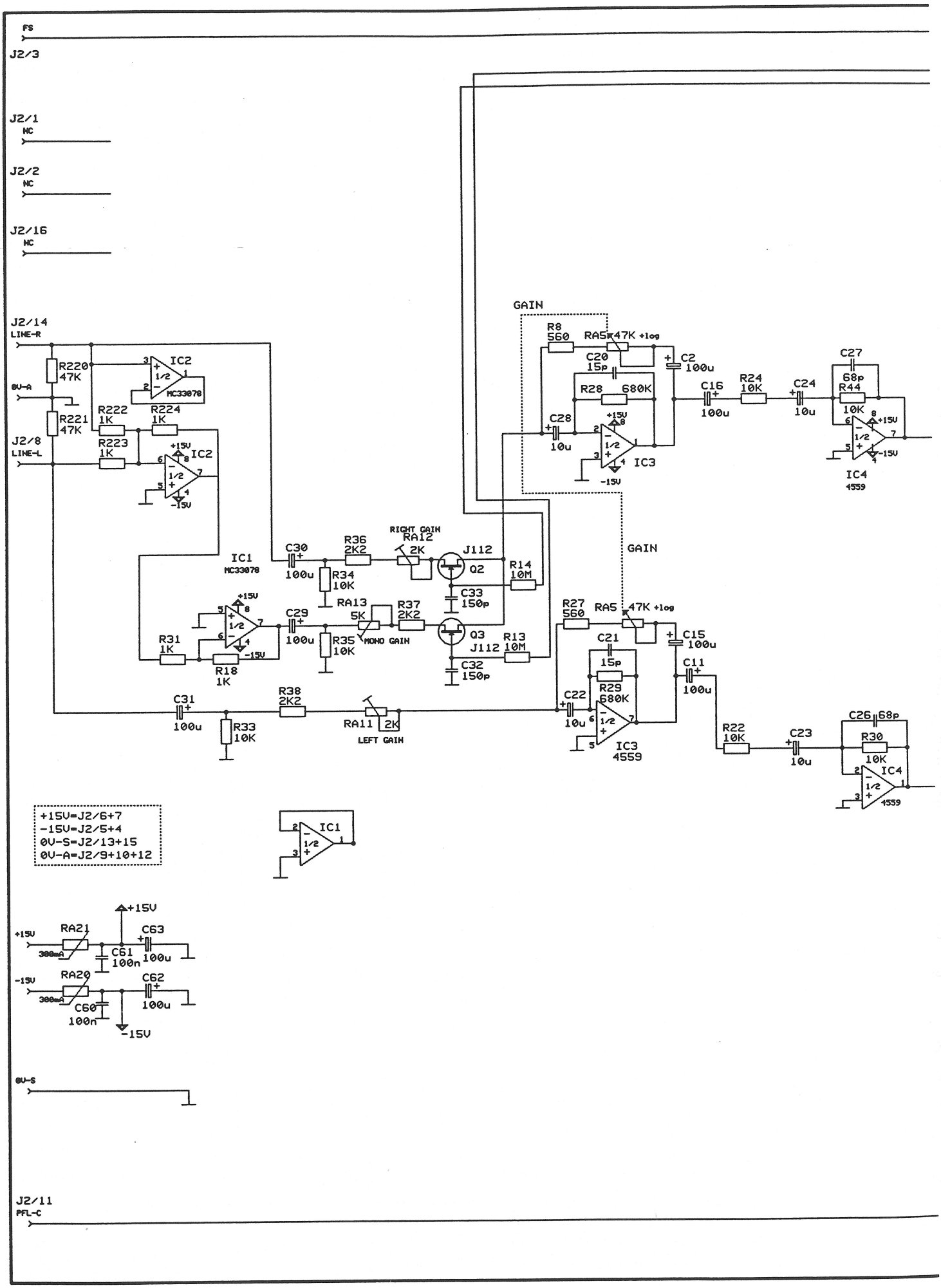
FS
J2/3
J2/1
NC
J2/2
NC
J2/16
NC
J2/14
LINE-R
0V-A
J2/8
LINE-L
R220 47K
R221 47K
R222 1K
R223 1K
R224 1K
IC2
MC33078
+15V
-15V
IC1
MC33078
C30 100u
R36 2K2
RA12 2K
RIGHT GAIN
J112
Q2
R14 10M
R34 10K
C33 150p
RA13 5K
MONO GAIN
R37 2K2
C29 100u
R35 10K
Q3
J112
R13 10M
C32 150p
R31 1K
R18 1K
C31 100u
R38 2K2
RA11 2K
LEFT GAIN
R33 10K
GAIN
R8 560
RA5 47K +log
C20 15p
C2 100u
R28 680K
C16 100u
R24 10K
C24 10u
C27 68p
R44 10K
C28 10u
IC3
IC4
4559
GAIN
R27 560
RA5 47K +log
C21 15p
C15 100u
R29 680K
C22 10u
C11 100u
IC3
4559
R22 10K
C23 10u
C26 68p
R30 10K
IC4
4559
+15V=J2/6+7
-15V=J2/5+4
0V-S=J2/13+15
0V-A=J2/9+10+12
IC1
+15V
RA21
C63 100u
C61 100n
300mA
-15V
RA20
C62 100u
C60 100n
0V-S
J2/11
PFL-C

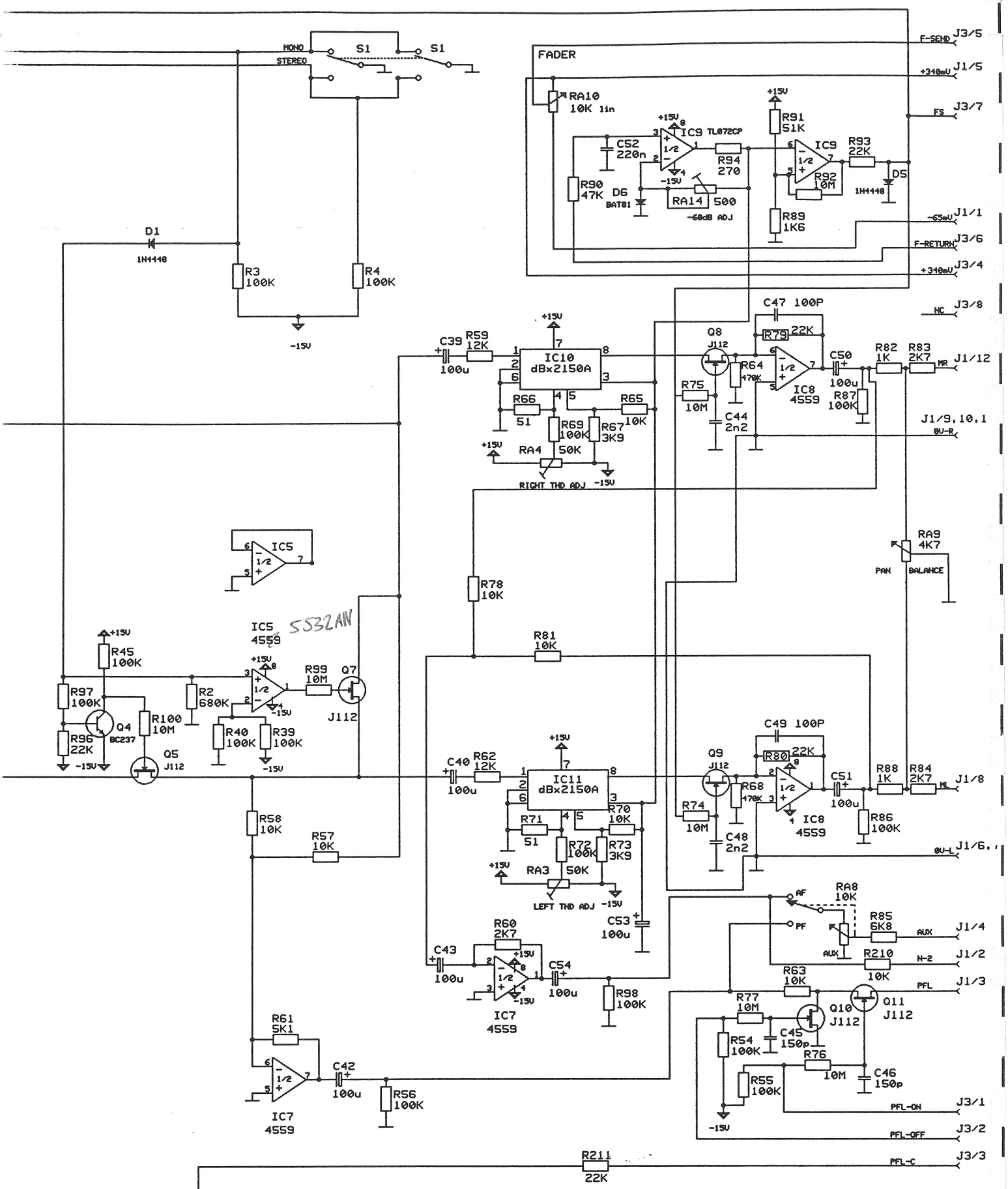

⓪ JUL-08-91 MJ	○ SEP-12-91 UL	○	○	○
	MIXING CONSOLE MB16			PAGE 1 OF 1
REVOX	INPUT UNIT LINE		SC	1.775.810.00

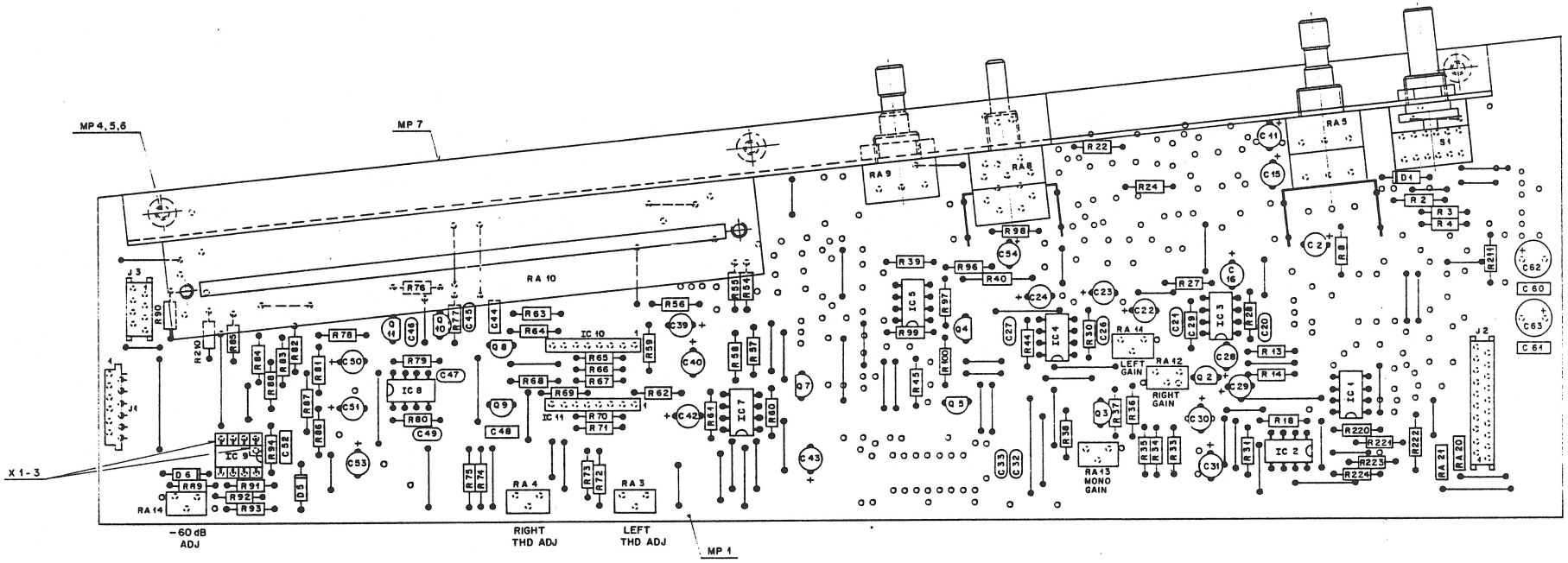

Nr. Etikette / ESE -Warnschild
aufgeklebt nach Fabrikationsmuster.

Werkstoff: Norm-Nr.: / DIN-Bez.: / Abmessung:	Güte: / Oberfläche: Ben.		Änderung:
Zugehörige Unterlagen: PL	Freimassstoleranz: ±	Massstab: 2:1	Ausgabe: 17.6.94 Datum: Gez. Gepr. Gen.
Ersetzt für:	Ersetzt durch:		Kopie für:
STUDER REGENSDORF ZÜRICH / Benennung: INPUT UNIT LINE ESE			Nummer: 1.775.810-00

1.775.810.00 INPUT UNIT LINE

Ad	..Pos..	...Ref.No...	Description			
	C.....2	59.22.3101	100 uF	-20%, 10V, EL		
	C....11	59.22.3101	100 uF	-20%, 10V, EL		
	C....15	59.22.3101	100 uF	-20%, 10V, EL		
	C....16	59.22.3101	100 uF	-20%, 10V, EL		
	C....20	59.34.1150	15 pF	10%, 25V, C		
	C....21	59.34.1150	15 pF	10%, 25V, C		
	C....22	59.22.6100	10 uF	-20%, 10V, EL		
	C....23	59.22.6100	10 uF	-20%, 10V, EL		
	C....24	59.22.6100	10 uF	-20%, 10V, EL		
	C....26	59.34.4680	68 pF	10%, 25V, C		
	C....27	59.34.4680	68 pF	10%, 25V, C		
	C....28	59.22.6100	10 uF	-20%, 10V, EL		
	C....29	59.22.3101	100 uF	-20%, 10V, EL		
	C....30	59.22.3101	100 uF	-20%, 10V, EL		
	C....31	59.22.3101	100 uF	-20%, 10V, EL		
	C....32	59.34.4151	150 pF	10%, 25V, C		
	C....33	59.34.4151	150 pF	10%, 25V, C		
	C....39	59.22.3101	100 uF	-20%, 10V, EL		
	C....40	59.22.3101	100 uF	-20%, 10V, EL		
	C....42	59.22.3101	100 uF	-20%, 10V, EL		
	C....43	59.22.3101	100 uF	-20%, 10V, EL		
	C....44	59.06.0222	2.2 nF	10%, 25V, PETP		
	C....45	59.34.4151	150 pF	10%, 25V, C		
	C....46	59.34.4151	150 pF	10%, 25V, C		
	C....47	59.34.4101	100 pF	10%, 25V, C		
	C....48	59.06.0222	2.2 nF	10%, 25V, PETP		
	C....49	59.34.4101	100 pF	10%, 25V, C		
	C....50	59.22.3101	100 uF	-20%, 10V, EL		
	C....51	59.22.3101	100 uF	-20%, 10V, EL		
	C....52	59.06.5224	220 nF	10%, 25V, PETP		
	C....53	59.22.3101	100 uF	-20%, 10V, EL		
	C....54	59.22.3101	100 uF	-20%, 10V, EL		
	C....60	59.06.0104	100 nF	10%, 25V, PETP		
	C....61	59.06.0104	100 nF	10%, 25V, PETP		
	C....62	59.22.5101	100 uF	-20%, 25V, EL		
	C....63	59.22.5101	100 uF	-20%, 25V, EL		
	D.....1	50.04.0125	1N 4448	any		
	D.....5	50.04.0125	1N 4448	any		
	D.....6	50.04.0523	BAT 81	Schottky-Diode		
	IC....1	50.09.0117	MC33078P			Mot
	IC....2	50.09.0117	MC33078P			Mot
	IC....3	50.09.0107	RC4559			Ra
	IC....4	50.09.0107	RC4559			Ra
	IC....5	50.09.0107	RC4559			Ra
	IC....7	50.09.0107	RC4559			Ra
	IC....8	50.09.0107	RC4559			Ra
	IC....9	50.09.0101	TL072CP			TI
	IC...10	50.11.0140	dbx2150A	VCA		dbx
	IC...11	50.11.0140	dbx2150A	VCA		dbx
	J.....1	54.14.5532	12-Pole	WinkelbuchsensteckerPrint	Micro-M	
	J.....2	54.14.5516	16-Pole	Buchsenstecker	Micro-M	
	J.....3	54.14.5508	8-Pole	Buchsenstecker	Micro-M	
	MP....1	1.775.800.11		INPUT PCB		
01	MP....1	1.775.800.12		INPUT PCB		
	MP....4	21.38.1352		Screw		
	MP....5	21.38.1352		Screw		
	MP....6	21.38.1352		Screw		
	MP....7	1.775.370.20		U-Profile		
	Q.....2	50.03.0350	J 112	FET		Mot
	Q.....3	50.03.0350	J 112	FET		Mot
	Q.....4	50.03.0436	BC 237	NPN		Mot
	Q.....5	50.03.0350	J 112	FET		Mot
	Q.....7	50.03.0350	J 112	FET		Mot
	Q.....8	50.03.0350	J 112	FET		Mot
	Q.....9	50.03.0350	J 112	FET		Mot
	Q....10	50.03.0350	J 112	FET		Mot
	Q....11	50.03.0350	J 112	FET		Mot
	R.....2	57.11.3684	680 KOhm	1%, 0.25W, MF		
	R.....3	57.11.3104	100 KOhm	1%, 0.25W, MF		
	R.....4	57.11.3104	100 KOhm	1%, 0.25W, MF		
	R.....8	57.11.3561	560 Ohm	1%, 0.25W, MF		
	R....13	57.11.5106	10 MOhm	1%, 0.25W, MF		
	R....14	57.11.5106	10 MOhm	5%, 0.25W, MF		
	R....18	57.11.3102	1 KOhm	1%, 0.25W, MF		
	R....22	57.11.3103	10 KOhm	1%, 0.25W, MF		
	R....24	57.11.3103	10 KOhm	1%, 0.25W, MF		
	R....27	57.11.3561	560 Ohm	1%, 0.25W, MF		
	R....28	57.11.3684	680 KOhm	1%, 0.25W, MF		
	R....29	57.11.3684	680 KOhm	1%, 0.25W, MF		
	R....30	57.11.3103	10 KOhm	1%, 0.25W, MF		
	R....31	57.11.3102	1 KOhm	1%, 0.25W, MF		
	R....33	57.11.3103	10 KOhm	1%, 0.25W, MF		
	R....34	57.11.3103	10 KOhm	1%, 0.25W, MF		
	R....35	57.11.3103	10 KOhm	1%, 0.25W, MF		
	R....36	57.11.3222	2.2 KOhm	1%, 0.25W, MF		
	R....37	57.11.3222	2.2 KOhm	1%, 0.25W, MF		
	R....38	57.11.3222	2.2 KOhm	1%, 0.25W, MF		
	R....39	57.11.3104	100 KOhm	1%, 0.25W, MF		
	R....40	57.11.3104	100 KOhm	1%, 0.25W, MF		
	R....44	57.11.3103	10 KOhm	1%, 0.25W, MF		
	R....45	57.11.3104	100 KOhm	1%, 0.25W, MF		
	R....54	57.11.3104	100 KOhm	1%, 0.25W, MF		
	R....55	57.11.3104	100 KOhm	1%, 0.25W, MF		
	R....56	57.11.3104	100 KOhm	1%, 0.25W, MF		
	R....57	57.11.3103	10 KOhm	1%, 0.25W, MF		
	R....58	57.11.3103	10 KOhm	1%, 0.25W, MF		
	R....59	57.11.3123	12 KOhm	1%, 0.25W, MF		
	R....60	57.11.3272	2.7 KOhm	1%, 0.25W, MF		
	R....61	57.11.3512	5.1 KOhm	1%, 0.25W, MF		
	R....62	57.11.3123	12 KOhm	1%, 0.25W, MF		
	R....63	57.11.3103	10 KOhm	1%, 0.25W, MF		
	R....64	57.11.3474	470 KOhm	1%, 0.25W, MF		
	R....65	57.11.3103	10 KOhm	1%, 0.25W, MF		
	R....66	57.11.3510	51 Ohm	1%, 0.25W, MF		
	R....67	57.11.3392	3.9 KOhm	1%, 0.25W, MF		
	R....68	57.11.3474	470 KOhm	1%, 0.25W, MF		
	R....69	57.11.3104	100 KOhm	1%, 0.25W, MF		
	R....70	57.11.3103	10 KOhm	1%, 0.25W, MF		
	R....71	57.11.3510	51 Ohm	1%, 0.25W, MF		
	R....72	57.11.3104	100 kOhm	1%, 0.25W, MF		
	R....73	57.11.3392	3.9 KOhm	1%, 0.25W, MF		
	R....74	57.11.5106	10 MOhm	5%, 0.25W, MF		
	R....75	57.11.5106	10 MOhm	5%, 0.25W, MF		
	R....76	57.11.5106	10 MOhm	5%, 0.25W, MF		
	R....77	57.11.5106	10 MOhm	5%, 0.25W, MF		
	R....78	57.11.3103	10 KOhm	1%, 0.25W, MF		
	R....79	57.11.3223	22 KOhm	1%, 0.25W, MF		
	R....80	57.11.3223	22 KOhm	1%, 0.25W, MF		
	R....81	57.11.3103	10 KOhm	1%, 0.25W, MF		
	R....82	57.11.3102	1 KOhm	1%, 0.25W, MF		
	R....83	57.11.3272	2.7 KOhm	1%, 0.25W, MF		
	R....84	57.11.3272	2.7 KOhm	1%, 0.25W, MF		
	R....85	57.11.3682	6.8 KOhm	1%, 0.25W, MF		
	R....86	57.11.3104	100 KOhm	1%, 0.25W, MF		
	R....87	57.11.3104	100 KOhm	1%, 0.25W, MF		
	R....88	57.11.3102	1 KOhm	1%, 0.25W, MF		
	R....89	57.11.3162	1.6 KOhm	1%, 0.25W, MF		
	R....90	57.11.3473	47 KOhm	1%, 0.25W, MF		
	R....91	57.11.3513	51 KOhm	1%, 0.25W, MF		
	R....92	57.11.5106	10 MOhm	5%, 0.25W, MF		
	R....93	57.11.3223	22 KOhm	1%, 0.25W, MF		
	R....94	57.11.3271	270 Ohm	1%, 0.25W, MF		
	R....96	57.11.3223	22 KOhm	1%, 0.25W, MF		
	R....97	57.11.3104	100 KOhm	1%, 0.25W, MF		
	R....98	57.11.3104	100 KOhm	1%, 0.25W, MF		
	R....99	57.11.5106	10 MOhm	5%, 0.25W, MF		
	R...100	57.11.5106	10 MOhm	5%, 0.25W, MF		
	R...210	57.11.3103	10 KOhm	1%, 0.25W, MF		
	R...211	57.11.3223	22 KOhm	1%, 0.25W, MF		
	R...220	57.11.3473	47 KOhm	1%, 0.25W, MF		
	R...221	57.11.3473	47 KOhm	1%, 0.25W, MF		
	R...222	57.11.3102	1 KOhm	1%, 0.25W, MF		
	R...223	57.11.3102	1 KOhm	1%, 0.25W, MF		
	R...224	57.11.3102	1 KOhm	1%, 0.25W, MF		
	RA....3	58.01.9503	50 KOhm	10%, 0.50W, C		
	RA....4	58.01.9503	50 KOhm	10%, 0.50W, C		
	RA....5	1.775.800.02	2*47 KOhm	pos.log		
	RA....8	1.369.150.03	1* 10KOhm	pos.log + Switch 1*2u		
	RA....9	1.775.330.06	1*4.7KOhm	lin.		
	RA...10	1.775.330.07	1* 10KOhm	lin. Fader		
	RA...11	58.01.9202	2 KOhm	10%, 0.50W, C		
	RA...12	58.01.9202	2 KOhm	10%, 0.50W, C		
	RA...13	58.01.9502	5 KOhm	10%, 0.50W, C		
	RA...14	58.01.9501	500 Ohm	10%, 0.50W, C		
	RA...20	57.92.7012	PTC 300	mA 60V		
	RA...21	57.92.7012	PTC 300	mA 60V		
	S.....1	1.775.800.01	Switch	1Step/2Pos.		
	X.....1	53.03.0218	4-pole	Socket		
	X.....2	53.03.0218	4-pole	Socket		
	X.....3	53.03.0218	1-pole	Socket		

00 KG 91/08/22
01 UL 91/11/04

EL=Electrolytic,C=Ceramic, PETP=Polyester

MF=Metal Film

MANUFACTURER: dbx=dbx Incorparated,NS=National Semiconductor,Mot=Motorola
RA=Raytheon,SIG=Signetics,TI=Texas Instruments

END

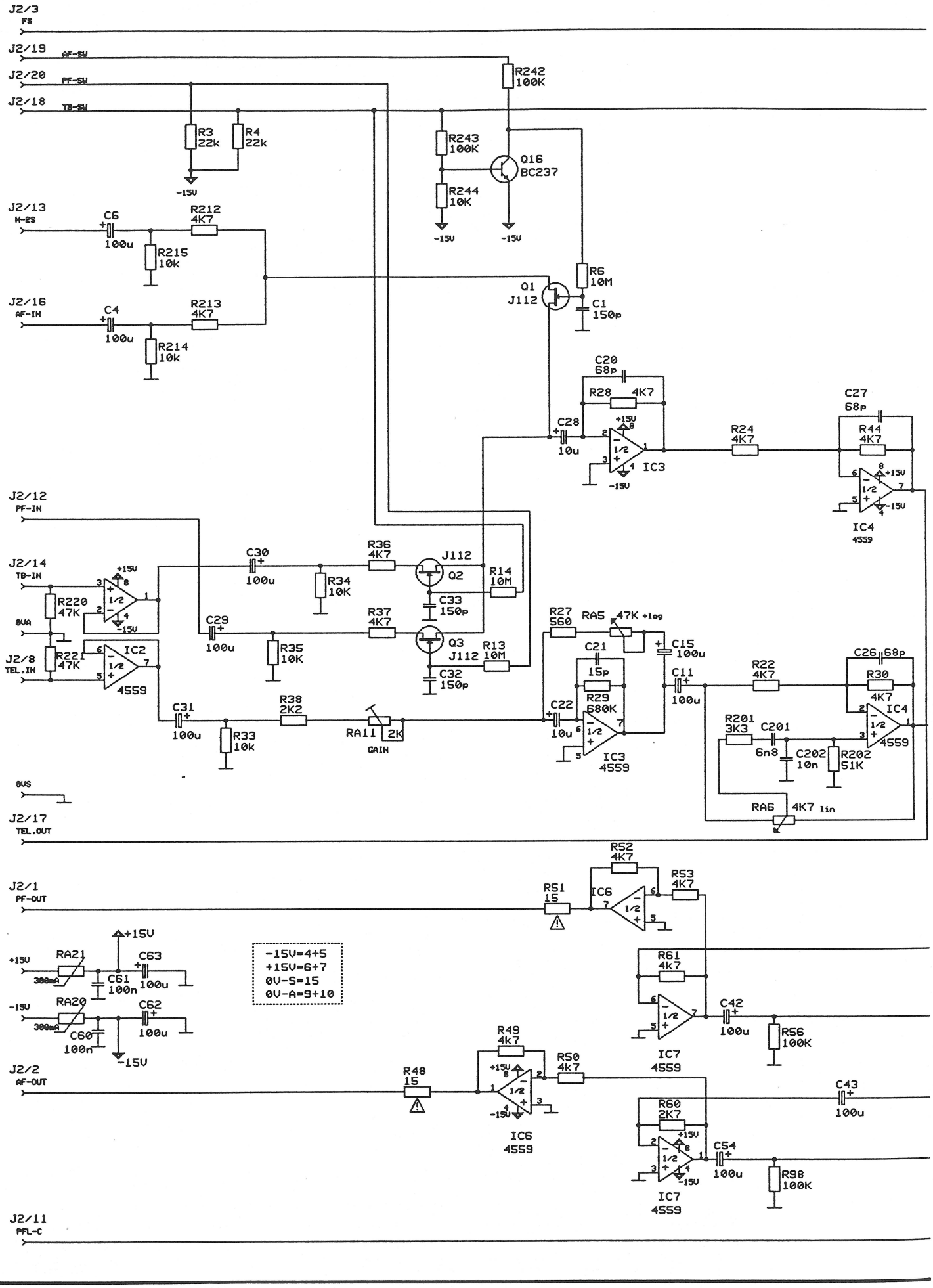
J2/3
FS
J2/19
AF-SW
J2/20
PF-SW
J2/18
TB-SW
R242
100K
R3
22k
R4
22k
-15V
R243
100K
Q16
BC237
R244
10K
-15V
-15V
J2/13
M-2S
C6
100u
R212
4K7
R215
10k
R6
10M
Q1
J112
C1
150p
J2/16
AF-IN
C4
100u
R213
4K7
R214
10k
C20
68p
R28
4K7
C28
10u
+15V
IC3
-15V
R24
4K7
C27
68p
R44
4K7
+15V
-15V
IC4
4559
J2/12
PF-IN
J2/14
TB-IN
R220
47K
+15V
-15V
0VA
J2/8
TEL.IN
R221
47K
IC2
4559
C30
100u
R34
10K
R36
4K7
J112
Q2
R14
10M
C33
150p
C29
100u
R35
10K
R37
4K7
Q3
J112
R13
10M
C32
150p
R27
560
RA5
47K +log
C15
100u
C21
15p
R29
680K
C22
10u
IC3
4559
C11
100u
R22
4K7
C26
68p
R30
4K7
IC4
4559
R201
3K3
C201
6n8
C202
10n
R202
51K
RA6
4K7 lin
C31
100u
R33
10k
R38
2K2
RA11
2K
GAIN
0VS
J2/17
TEL.OUT
J2/1
PF-OUT
R52
4K7
R53
4K7
R51
15
IC6
4559
+15V
RA21
300mA
C63
100u
C61
100n
-15V
RA20
300mA
C62
100u
C60
100n
-15V
-15V=4+5
+15V=6+7
0V-S=15
0V-A=9+10
R61
4k7
C42
100u
R56
100K
IC7
4559
J2/2
AF-OUT
R48
15
R49
4k7
R50
4k7
IC6
4559
C43
100u
R60
2K7
C54
100u
R98
100K
IC7
4559
J2/11
PFL-C

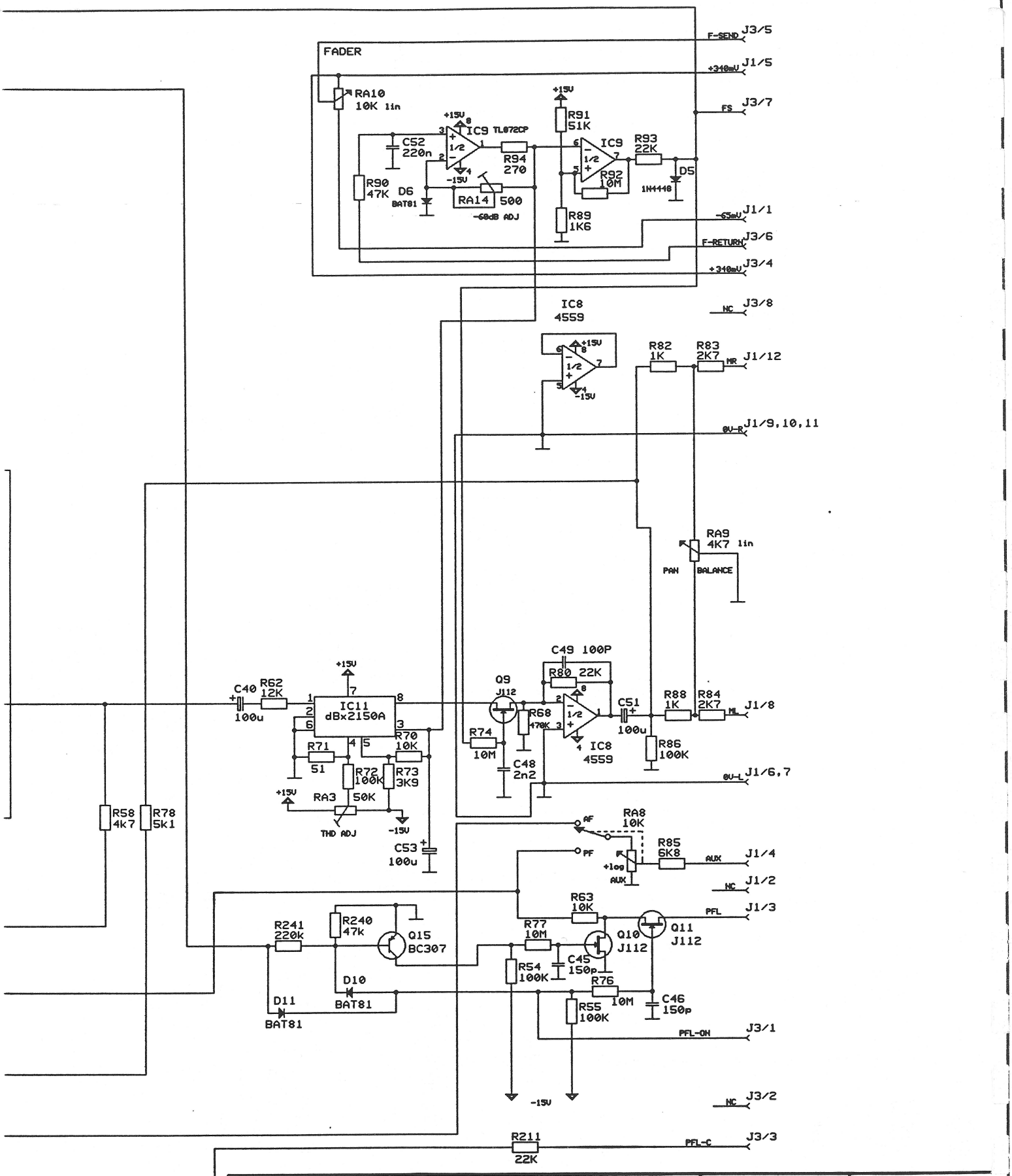

⓪ JUL-09-91 ML	○ SEP-12-91 UL	○	○	○	
	MIXING CONSOLE MB16			PAGE 1 OF 1	
REVOX	INPUT UNIT TELEPHON		SC	1.775.820.00	

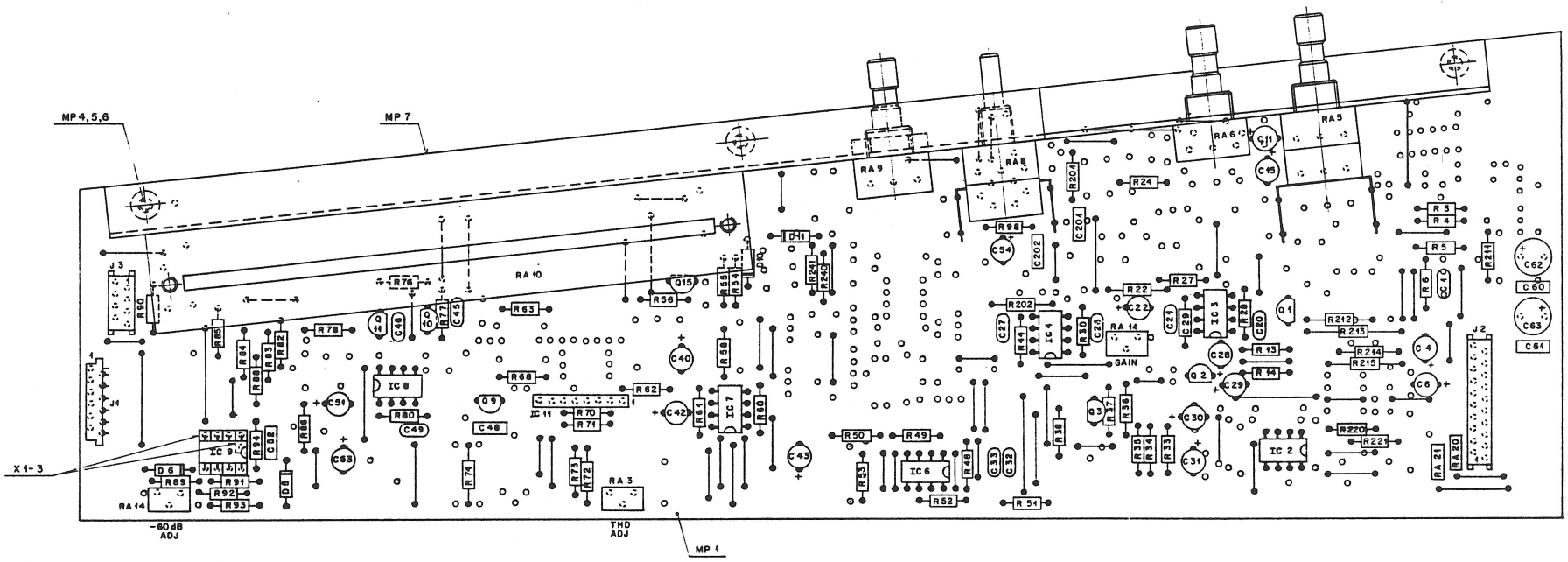

Nr. Etikette / ESE-Warnschild aufgeklebt nach Fabrikationsmuster.

Werkstoff: Norm-Nr.: / DIN-Bez.: / Abmessung:	Oberfläche: Güte: / Ben.:			Änderung: 3 / 2 / 1
Zugehörige Unterlagen: PL	Freimaßtoleranz: ±	Maßstab: 2:1	Ausgabe: 19.6.91 Ha	0
Ersatz für:	Ersetzt durch:		Kopie für:	

STUDER REGENSDORF ZÜRICH	Benennung: INPUT UNIT TELEPHONE ESE	Nummer: 1.775.820-00

1.775.820.00 INPUT UNIT TELEPHONE

Ad	..Pos..	...Ref.No...	Description			
	C.....1	59.34.4151	150 pF	10%, 25V, C		
	C.....4	59.22.3101	100 uF	-20%, 10V, EL		
	C.....6	59.22.3101	100 uF	-20%, 10V, EL		
	C....11	59.22.3101	100 uF	-20%, 10V, EL		
	C....15	59.22.3101	100 uF	-20%, 10V, EL		
	C....20	59.34.4680	68 pF	10%, 25V, C		
	C....21	59.34.1150	15 pF	10%, 25V, C		
	C....22	59.22.6100	10 uF	-20%, 10V, EL		
	C....26	59.34.4680	68 pF	10%, 25V, C		
	C....27	59.34.4680	68 pF	10%, 25V, C		
	C....28	59.22.6100	10 uF	-20%, 10V, EL		
	C....29	59.22.3101	100 uF	-20%, 10V, EL		
	C....30	59.22.3101	100 uF	-20%, 10V, EL		
	C....31	59.22.3101	100 uF	-20%, 10V, EL		
	C....32	59.34.4151	150 pF	10%, 25V, C		
	C....33	59.34.4151	150 pF	10%, 25V, C		
	C....40	59.22.3101	100 uF	-20%, 10V, EL		
	C....42	59.22.3101	100 uF	-20%, 10V, EL		
	C....43	59.22.3101	100 uF	-20%, 10V, EL		
	C....45	59.34.4151	150 pF	10%, 25V, C		
	C....46	59.34.4151	150 pF	10%, 25V, C		
	C....48	59.06.0222	2.2 nF	10%, 25V, PETP		
	C....49	59.34.4101	100 pF	10%, 25V, C		
	C....51	59.22.3101	100 uF	-20%, 10V, EL		
	C....52	59.06.5224	220 nF	10%, 25V, PETP		
	C....53	59.22.3101	100 uF	-20%, 10V, EL		
	C....54	59.22.3101	100 uF	-20%, 10V, EL		
	C....60	59.06.0104	100 nF	10%, 25V, PETP		
	C....61	59.06.0104	100 nF	10%, 25V, PETP		
	C....62	59.22.5101	100 uF	10%, 25V, EL		
	C....63	59.22.5101	100 uF	10%, 25V, EL		
	C...201	59.06.0682	6.8 nF	10%, 25V, PETP		
	C...202	59.06.0103	10 nF	10%, 25V, PETP		
	D.....5	50.04.0125	1N 4448	any		
	D.....6	50.04.0523	BAT 81	Schottky-Diode		
	D....10	50.04.0523	BAT 81	Schottky-Diode		
	D....11	50.04.0523	BAT 81	Schottky-Diode		
	IC....2	50.09.0107	RC4559			Ra
	IC....3	50.09.0107	RC4559			Ra
	IC....4	50.09.0107	RC4559			Ra
	IC....6	50.09.0107	RC4559			Ra
	IC....7	50.09.0107	RC4559			Ra
	IC....8	50.09.0107	RC4559			Ra
	IC....9	50.09.0101	TL072CP			TI
	IC....11	50.11.0140	dbx2150A	VCA		dbx
	J.....1	54.14.5532	12-Pole	WinkelbuchsensteckerPrint	Micro-M	
	J.....2	54.14.5520	20-Pole	Buchsenstecker	Micro-M	
	J.....3	54.14.5508	8-Pole	Buchsenstecker	Micro-M	
	MP....1	1.775.800.11		INPUT PCB		
	MP....4	21.38.1352		Screw		
	MP....5	21.38.1352		Screw		
	MP....6	21.38.1352		Screw		
	MP....7	1.775.370.20		U-Profile		
	Q.....1	50.03.0350	J 112	FET		Not
	Q.....2	50.03.0350	J 112	FET		Not
	Q.....3	50.03.0350	J 112	FET		Not
	Q.....9	50.03.0350	J 112	FET		Not
	Q....10	50.03.0350	J 112	FET		Not
	Q....11	50.03.0350	J 112	FET		Not
	Q....15	50.03.0515	BC 307	PNP		
01	Q....16	50.03.0436	BC 237	NPN		
	R.....3	57.11.3223	22 KOhm	1%, 0.25W, MF		
	R.....4	57.11.3223	22 KOhm	1%, 0.25W, MF		
	R.....5	57.11.3104	100 KOhm	1%, 0.25W, MF		
01	R.....5	. .		Not Used		
	R.....6	57.11.5106	10 MOhm	5%, 0.25W, MF		
	R....13	57.11.5106	10 MOhm	1%, 0.25W, MF		
	R....14	57.11.5106	10 MOhm	5%, 0.25W, MF		
	R....22	57.11.3472	4.7 KOhm	1%, 0.25W, MF		
	R....24	57.11.3472	4.7 KOhm	1%, 0.25W, MF		
	R....27	57.11.3561	560 Ohm	1%, 0.25W, MF		
	R....28	57.11.3472	4.7 KOhm	1%, 0.25W, MF		
	R....29	57.11.3684	680 KOhm	1%, 0.25W, MF		
	R....30	57.11.3472	4.7 KOhm	1%, 0.25W, MF		
	R....33	57.11.3103	10 KOhm	1%, 0.25W, MF		
	R....34	57.11.3103	10 KOhm	1%, 0.25W, MF		
	R....35	57.11.3103	10 KOhm	1%, 0.25W, MF		
	R....36	57.11.3472	4.7 KOhm	1%, 0.25W, MF		
	R....37	57.11.3472	4.7 KOhm	1%, 0.25W, MF		
	R....38	57.11.3222	2.2 KOhm	1%, 0.25W, MF		
	R....44	57.11.3472	4.7 KOhm	1%, 0.25W, MF		
	R....48	57.19.0150	15 Ohm	5%, 0.25W, MF	Fusible Resistor I	
	R....49	57.11.3472	4.7 KOhm	1%, 0.25W, MF		
	R....50	57.11.3472	4.7 KOhm	1%, 0.25W, MF		
	R....51	57.19.0150	15 Ohm	5%, 0.25W, MF	Fusible Resistor I	
	R....52	57.11.3472	4.7 KOhm	1%, 0.25W, MF		
	R....53	57.11.3472	4.7 KOhm	1%, 0.25W, MF		
	R....54	57.11.3104	100 KOhm	1%, 0.25W, MF		
	R....55	57.11.3104	100 KOhm	1%, 0.25W, MF		
	R....56	57.11.3104	100 KOhm	1%, 0.25W, MF		
	R....58	57.11.3472	4.7 KOhm	1%, 0.25W, MF		
	R....60	57.11.3272	2.7 KOhm	1%, 0.25W, MF		
	R....61	57.11.3472	4.7 KOhm	1%, 0.25W, MF		
	R....62	57.11.3123	12 KOhm	1%, 0.25W, MF		
	R....63	57.11.3103	10 KOhm	1%, 0.25W, MF		
	R....68	57.11.3474	470 KOhm	1%, 0.25W, MF		
	R....70	57.11.3103	10 KOhm	1%, 0.25W, MF		
	R....71	57.11.3510	51 Ohm	1%, 0.25W, MF		
	R....72	57.11.3104	100 kOhm	1%, 0.25W, MF		
	R....73	57.11.3392	3.9 KOhm	1%, 0.25W, MF		
	R....74	57.11.5106	10 MOhm	5%, 0.25W, MF		
	R....76	57.11.5106	10 MOhm	5%, 0.25W, MF		
	R....77	57.11.5106	10 MOhm	5%, 0.25W, MF		
	R....78	57.11.3512	5.1 KOhm	1%, 0.25W, MF		
	R....80	57.11.3223	22 KOhm	1%, 0.25W, MF		
	R....82	57.11.3102	1 KOhm	1%, 0.25W, MF		
	R....83	57.11.3272	2.7 KOhm	1%, 0.25W, MF		
	R....84	57.11.3272	2.7 KOhm	1%, 0.25W, MF		
	R....85	57.11.3682	6.8 KOhm	1%, 0.25W, MF		
	R....86	57.11.3104	100 KOhm	1%, 0.25W, MF		
	R....88	57.11.3102	1 KOhm	1%, 0.25W, MF		
	R....89	57.11.3162	1.6 KOhm	1%, 0.25W, MF		
	R....90	57.11.3473	47 KOhm	1%, 0.25W, MF		
	R....91	57.11.3513	51 KOhm	1%, 0.25W, MF		
	R....92	57.11.5106	10 MOhm	5%, 0.25W, MF		
	R....93	57.11.3223	22 KOhm	1%, 0.25W, MF		
	R....94	57.11.3271	270 Ohm	1%, 0.25W, MF		
	R....98	57.11.3104	100 KOhm	1%, 0.25W, MF		
	R...201	57.11.3332	3.3 KOhm	1%, 0.25W, MF		
	R...202	57.11.3513	51 KOhm	1%, 0.25W, MF		
	R...211	57.11.3223	22 KOhm	1%, 0.25W, MF		
	R...212	57.11.3472	4.7 KOhm	1%, 0.25W, MF		
	R...213	57.11.3472	4.7 KOhm	1%, 0.25W, MF		
	R...214	57.11.3103	10 KOhm	1%, 0.25W, MF		
	R...215	57.11.3103	10 KOhm	1%, 0.25W, MF		
	R...220	57.11.3473	47 KOhm	1%, 0.25W, MF		
	R...221	57.11.3473	47 KOhm	1%, 0.25W, MF		
	R...240	57.11.3473	47 KOhm	1%, 0.25W, MF		
	R...241	57.11.3224	220 KOhm	1%, 0.25W, MF		
01	R...242	57.11.3104	100 KOhm	1%, 0.25W, MF		
01	R...243	57.11.3104	100 KOhm	1%, 0.25W, MF		
01	R...244	57.11.3103	10 KOhm	1%, 0.25W, MF		
	RA....3	58.01.9503	50 KOhm	10%, 0.50W, C		
	RA....5	1.775.800.02	2*47 KOhm	pos.log		
	RA....6	1.775.330.06	1*4.7KOhm	lin		
	RA....8	1.369.150.03	1* 10KOhm	pos.log + Switch 1*2u		
	RA....9	1.775.330.06	1*4.7KOhm	lin.		
	RA...10	1.775.330.07	1* 10KOhm	lin. Fader		
	RA...11	58.01.9202	2 KOhm	10%, 0.50W, C		
02	RA...13	58.01.9502	5 KOhm	10%, 0.50W, C		
	RA...14	58.01.9501	500 Ohm	10%, 0.50W, C		
	RA...20	57.92.7012	PTC 300 mA 60V			
	RA...21	57.92.7012	PTC 300 mA 60V			
	X.....1	53.03.0218	4-pole	Socket		
	X.....2	53.03.0218	4-pole	Socket		
	X.....3	53.03.0218	1-pole	Socket		

00 KG 91/08/22
01 UL 91/11/0401

EL=Electrolytic,C=Ceramic, PETP=Polyester

MF=Metal Film

MANUFACTURER: dbx=dbx Incorparated,NS=National Semiconductor,Mot=Motorola
RA=Raytheon,SIG=Signetics,TI=Texas Instruments

END

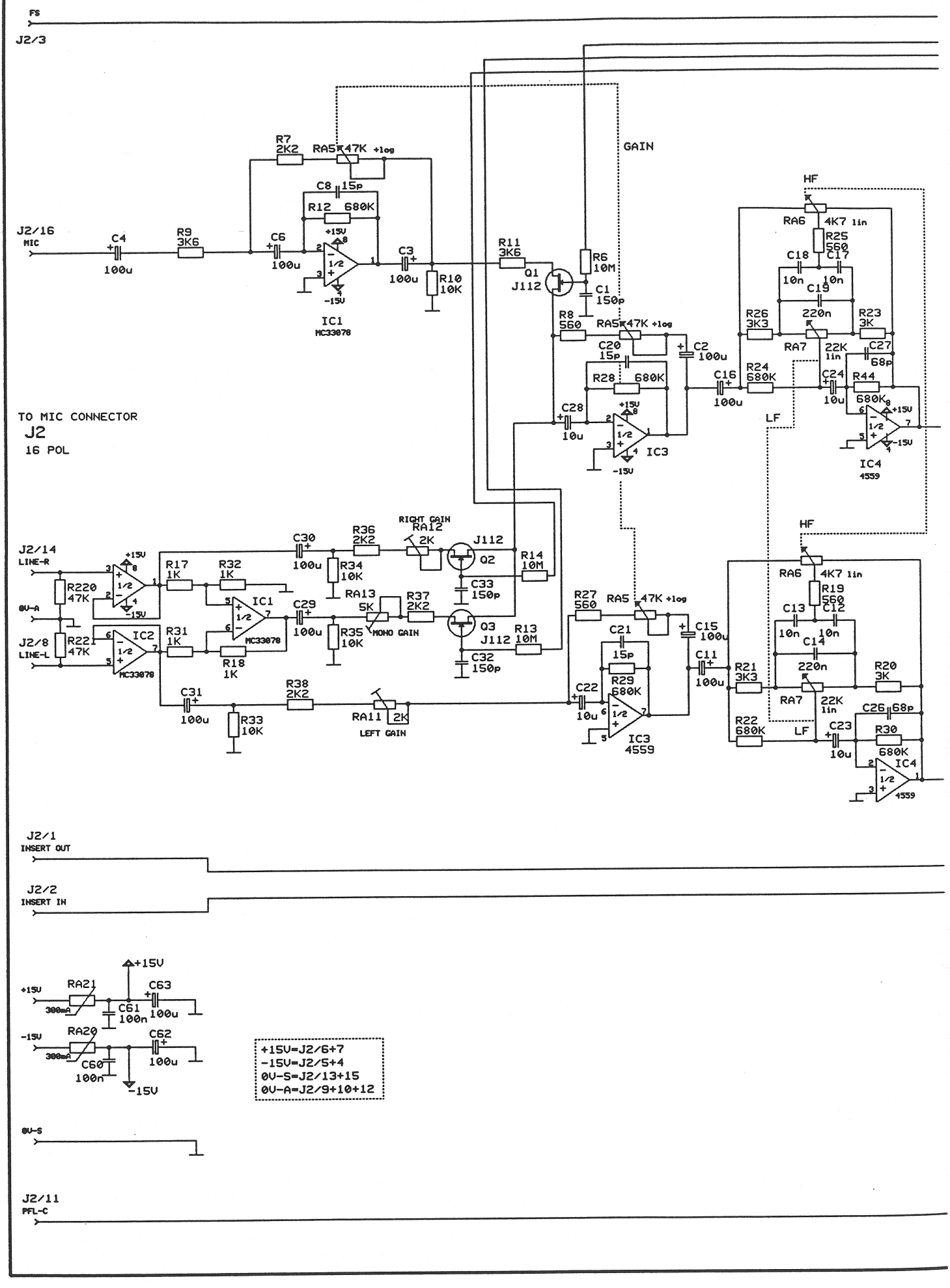
FS
J2/3
GAIN
HF
LF
R7 2K2
RA5 47K +log
C8 15p
R12 680K
J2/16
MIC
C4 100u
R9 3K6
C6 100u
C3 100u
R10 10K
IC1
MC33078
+15V
-15V
R11 3K6
Q1 J112
R6 10M
C1 150p
R8 560
C20 15p
R28 680K
C2 100u
C28 10u
IC3
4559
C16 100u
RA6 4K7 lin
R25 560
C18 10n
C17 10n
C19 220n
R26 3K3
R23 3K
RA7 22K lin
C27 68p
R24 680K
C24 10u
R44 680K
IC4
4559
TO MIC CONNECTOR
J2
16 POL
J2/14
LINE-R
0V-A
J2/8
LINE-L
R220 47K
R221 47K
IC2
MC33078
R17 1K
R32 1K
R31 1K
R18 1K
IC1
MC33078
C30 100u
R36 2K2
RA12 2K
RIGHT GAIN
J112
Q2
R14 10M
C33 150p
R34 10K
RA13 5K
MONO GAIN
R37 2K2
C29 100u
R35 10K
Q3 J112
R13 10M
C32 150p
C31 100u
R33 10K
R38 2K2
RA11 2K
LEFT GAIN
R27 560
RA5 47K +log
C21 15p
R29 680K
C22 10u
IC3
4559
C15 100u
C11 100u
RA6 4K7 lin
R19 560
C13 10n
C12 10n
C14 220n
R21 3K3
R20 3K
RA7 22K lin
R22 680K
C23 10u
C26 68p
R30 680K
IC4
4559
J2/1
INSERT OUT
J2/2
INSERT IN
+15V
-15V
RA21
RA20
300mA
C61 100n
C60 100n
C63 100u
C62 100u
+15V=J2/6+7
-15V=J2/5+4
0V-S=J2/13+15
0V-A=J2/9+10+12
0V-S
J2/11
PFL-C

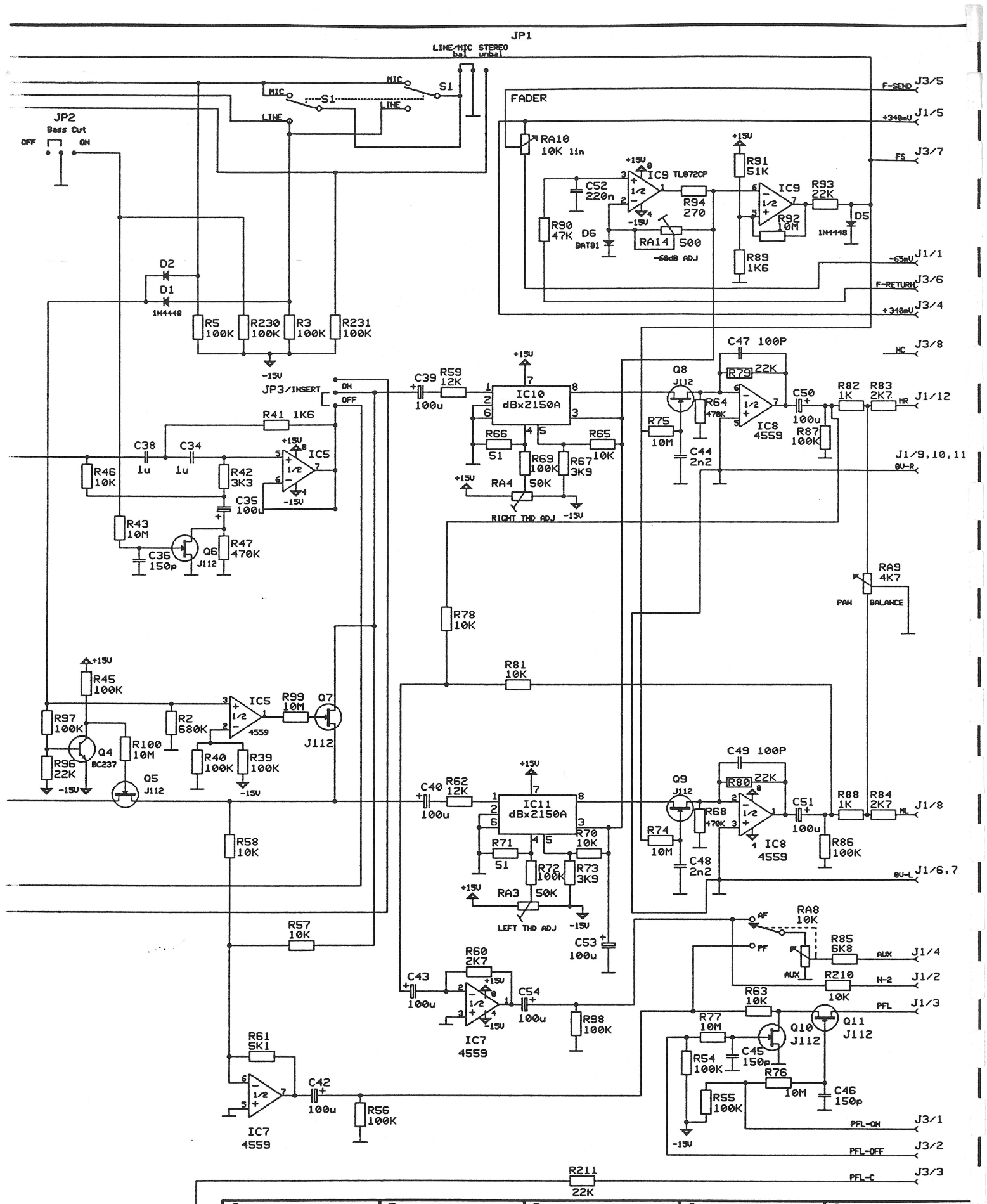

⓪ JUL-08-91 MJ	○ SEP-12-91 UL	○	○	○
	MIXING CONSOLE MB16			PAGE 1 OF 1
REVOX	INPUT UNIT MIC-EQUALIZER		SC	1.775.830.00

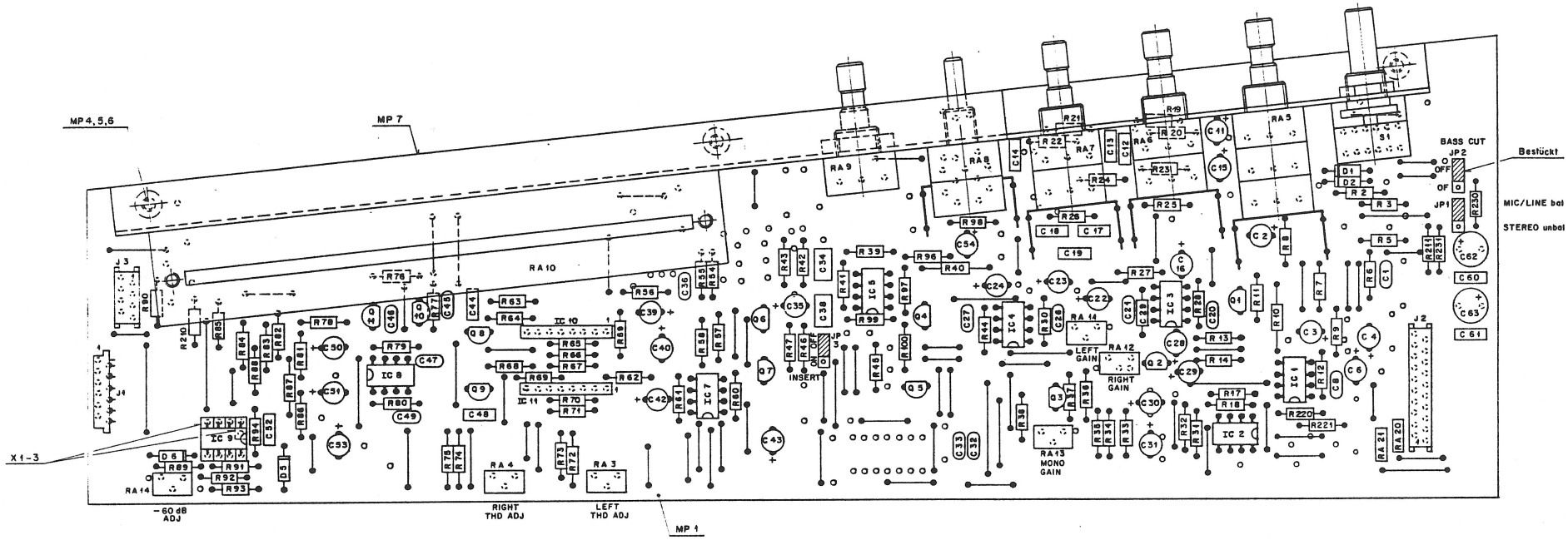

Nr. Etikette / ESE-Warnschild aufgeklebt nach Fabrikationsmuster.

Werkstoff: Norm-Nr.: / DIN-Bez.: / Abmessung:	Oberfläche: Güte: / Beh.:			Änderung	③ ② ① ⓪
Zugehöriges Unterlagen: PL	Freimaßtoleranz: ±	Maßstab: 2:1		Ausgabe: 18.6.91	Datum / Gez. / Gepr. / Gen. / Index
Ersatz für:	Ersetzt durch:			Kopie für:	
STUDER REGENSDORF	INPUT UNIT MIC EQUALIZER ESE			Nr.	4.775.830-00

1.775.830.00 INPUT UNIT MIC EQUALIZER

Ad	..Pos..	...Ref.No...	Description			
	C.....1	59.34.4151	150 pF	10%, 25V, C		
	C.....2	59.22.3101	100 uF	-20%, 10V, EL		
	C.....3	59.22.3101	100 uF	-20%, 10V, EL		
	C.....4	59.22.3101	100 uF	-20%, 10V, EL		
	C.....6	59.22.3101	100 uF	-20%, 10V, EL		
	C.....8	59.34.1150	15 pF	10%, 25V, C		
	C....11	59.22.3101	100 uF	-20%, 10V, EL		
	C....12	59.06.5103	10 nF	10%, 25V, PETP		
	C....13	59.06.5103	10 nF	10%, 25V, PETP		
	C....14	59.06.5224	220 nF	10%, 25V, PETP		
	C....15	59.22.3101	100 uF	-20%, 10V, EL		
	C....16	59.22.3101	100 uF	-20%, 10V, EL		
	C....17	59.06.5103	10 nF	10%, 25V, PETP		
	C....18	59.06.5103	10 nF	10%, 25V, PETP		
	C....19	59.06.5224	220 nF	10%, 25V, PETP		
	C....20	59.34.1150	15 pF	10%, 25V, C		
	C....21	59.34.1150	15 pF	10%, 25V, C		
	C....22	59.22.6100	10 uF	-20%, 10V, EL		
	C....23	59.22.6100	10 uF	-20%, 10V, EL		
	C....24	59.22.6100	10 uF	-20%, 10V, EL		
	C....26	59.34.4680	68 pF	10%, 25V, C		
	C....27	59.34.4680	68 pF	10%, 25V, C		
	C....28	59.22.6100	10 uF	-20%, 10V, EL		
	C....29	59.22.3101	100 uF	-20%, 10V, EL		
	C....30	59.22.3101	100 uF	-20%, 10V, EL		
	C....31	59.22.3101	100 uF	-20%, 10V, EL		
	C....32	59.34.4151	150 pF	10%, 25V, C		
	C....33	59.34.4151	150 pF	10%, 25V, C		
	C....34	59.06.0105	1 uF	10%, 25V, PETP		
	C....35	59.22.3101	100 uF	-20%, 10V, EL		
	C....36	59.34.4151	150 pF	10%, 25V, C		
	C....38	59.06.0105	1 uF	10%, 25V, PETP		
	C....39	59.22.3101	100 uF	-20%, 10V, EL		
	C....40	59.22.3101	100 uF	-20%, 10V, EL		
	C....42	59.22.3101	100 uF	-20%, 10V, EL		
	C....43	59.22.3101	100 uF	-20%, 10V, EL		
	C....44	59.06.0222	2.2 nF	10%, 25V, PETP		
	C....45	59.34.4151	150 pF	10%, 25V, C		
	C....46	59.34.4151	150 pF	10%, 25V, C		
	C....47	59.34.4101	100 pF	10%, 25V, C		
	C....48	59.06.0222	2.2 nF	10%, 25V, PETP		
	C....49	59.34.4101	100 pF	10%, 25V, C		
	C....50	59.22.3101	100 uF	-20%, 10V, EL		
	C....51	59.22.3101	100 uF	-20%, 10V, EL		
	C....52	59.06.5224	220 nF	10%, 25V, PETP		
	C....53	59.22.3101	100 uF	-20%, 10V, EL		
	C....54	59.22.3101	100 uF	-20%, 10V, EL		
	C....60	59.06.0104	100 nF	10%, 25V, PETP		
	C....61	59.06.0104	100 nF	10%, 25V, PETP		
	C....62	59.22.5101	100 uF	-20%, 25V, EL		
	C....63	59.22.5101	100 uF	-20%, 25V, EL		
	D.....1	50.04.0125	1N 4448	any		
	D.....2	50.04.0125	1N 4448	any		
	D.....5	50.04.0125	1N 4448	any		
	D.....6	50.04.0523	BAT 81	Schottky-Diode		
	IC....1	50.09.0117	MC33078P			Mot
	IC....2	50.09.0117	MC33078P			Mot
	IC....3	50.09.0107	RC4559			Ra
	IC....4	50.09.0107	RC4559			Ra
	IC....5	50.09.0107	RC4559			Ra
	IC....7	50.09.0107	RC4559			Ra
	IC....8	50.09.0107	RC4559			Ra
	IC....9	50.09.0101	TL072CP			TI
	IC...10	50.11.0140	dbx2150A	VCA		dbx
	IC...11	50.11.0140	dbx2150A	VCA		dbx
	J.....1	54.14.5532	12-Pole	WinkelbuchsensteckerPrint	Micro-M	
	J.....2	54.14.5516	16-Pole	Buchsenstecker	Micro-M	
	J.....3	54.14.5508	8-Pole	Buchsenstecker	Micro-M	
	JP....1	54.11.0128	Jumper			
	JP....2	54.11.0128	Jumper			
	JP....3	54.11.0128	Jumper			
	MP....1	1.775.800.11		INPUT PCB		
01	MP....1	1.775.800.12		INPUT PCB		
	MP....4	21.38.1352		Screw		
	MP....5	21.38.1352		Screw		
	MP....6	21.38.1352		Screw		
	MP....7	1.775.370.20		U-Profile		
	P.....1	54.01.0020		3 Pin		
	P.....2	54.01.0020		3 Pin		
	P.....3	54.01.0020		3 Pin		
	Q.....1	50.03.0350	J 112	FET		Mot
	Q.....2	50.03.0350	J 112	FET		Mot
	Q.....3	50.03.0350	J 112	FET		Mot
	Q.....4	50.03.0436	BC 237	NPN		Mot
	Q.....5	50.03.0350	J 112	FET		Mot
	Q.....6	50.03.0350	J 112	FET		Mot
	Q.....7	50.03.0350	J 112	FET		Mot
	Q.....8	50.03.0350	J 112	FET		Mot
	Q.....9	50.03.0350	J 112	FET		Mot
	Q....10	50.03.0350	J 112	FET		Mot
	Q....11	50.03.0350	J 112	FET		Mot
	R.....2	57.11.3684	680 KOhm	1%, 0.25W, MF		
	R.....3	57.11.3104	100 KOhm	1%, 0.25W, MF		
	R.....5	57.11.3104	100 KOhm	1%, 0.25W, MF		
	R.....6	57.11.5106	10 MOhm	5%, 0.25W, MF		
	R.....7	57.11.3222	2.2 KOhm	1%, 0.25W, MF		
	R.....8	57.11.3561	560 Ohm	1%, 0.25W, MF		
	R.....9	57.11.3362	3.6 KOhm	1%, 0.25W, MF		
	R....10	57.11.3103	10 KOhm	1%, 0.25W, MF		
	R....11	57.11.3362	3.6 KOhm	1%, 0.25W, MF		
	R....12	57.11.3684	680 KOhm	1%, 0.25W, MF		
	R....13	57.11.5106	10 MOhm	1%, 0.25W, MF		
	R....14	57.11.5106	10 MOhm	5%, 0.25W, MF		
	R....17	57.11.3102	1 KOhm	1%, 0.25W, MF		
	R....18	57.11.3102	1 KOhm	1%, 0.25W, MF		
	R....19	57.11.3561	560 Ohm	1%, 0.25W, MF		
	R....20	57.11.3302	3 KOhm	1%, 0.25W, MF		
	R....21	57.11.3332	3.3 KOhm	1%, 0.25W, MF		
	R....22	57.11.3684	680 KOhm	1%, 0.25W, MF		
	R....23	57.11.3302	3 KOhm	1%, 0.25W, MF		
	R....24	57.11.3684	680 KOhm	1%, 0.25W, MF		
	R....25	57.11.3561	560 Ohm	1%, 0.25W, MF		
	R....26	57.11.3332	3.3 KOhm	1%, 0.25W, MF		
	R....27	57.11.3561	560 Ohm	1%, 0.25W, MF		
	R....28	57.11.3684	680 KOhm	1%, 0.25W, MF		
	R....29	57.11.3684	680 KOhm	1%, 0.25W, MF		
	R....30	57.11.3684	680 KOhm	1%, 0.25W, MF		
	R....31	57.11.3102	1 KOhm	1%, 0.25W, MF		
	R....32	57.11.3102	1 KOhm	1%, 0.25W, MF		
	R....33	57.11.3103	10 KOhm	1%, 0.25W, MF		
	R....34	57.11.3103	10 KOhm	1%, 0.25W, MF		
	R....35	57.11.3103	10 KOhm	1%, 0.25W, MF		
	R....36	57.11.3222	2.2 KOhm	1%, 0.25W, MF		
	R....37	57.11.3222	2.2 KOhm	1%, 0.25W, MF		
	R....38	57.11.3222	2.2 KOhm	1%, 0.25W, MF		
	R....39	57.11.3104	100 KOhm	1%, 0.25W, MF		
	R....40	57.11.3104	100 KOhm	1%, 0.25W, MF		
	R....41	57.11.3162	1.6 KOhm	1%, 0.25W, MF		
	R....42	57.11.3332	3.3K Ohm	1%, 0.25W, MF		
	R....43	57.11.5106	10 MOhm	5%, 0.25W, MF		
	R....44	57.11.3684	680 KOhm	1%, 0.25W, MF		
	R....45	57.11.3104	100 KOhm	1%, 0.25W, MF		
	R....46	57.11.3103	10 KOhm	1%, 0.25W, MF		
	R....47	57.11.3474	470 KOhm	1%, 0.25W, MF		
	R....54	57.11.3104	100 KOhm	1%, 0.25W, MF		
	R....55	57.11.3104	100 KOhm	1%, 0.25W, MF		
	R....56	57.11.3104	100 KOhm	1%, 0.25W, MF		
	R....57	57.11.3103	10 KOhm	1%, 0.25W, MF		
	R....58	57.11.3103	10 KOhm	1%, 0.25W, MF		
	R....59	57.11.3123	12 KOhm	1%, 0.25W, MF		
	R....60	57.11.3272	2.7 KOhm	1%, 0.25W, MF		
	R....61	57.11.3512	5.1 KOhm	1%, 0.25W, MF		
	R....62	57.11.3123	12 KOhm	1%, 0.25W, MF		
	R....63	57.11.3103	10 KOhm	1%, 0.25W, MF		
	R....64	57.11.3474	470 KOhm	1%, 0.25W, MF		
	R....65	57.11.3103	10 KOhm	1%, 0.25W, MF		
	R....66	57.11.3510	51 Ohm	1%, 0.25W, MF		
	R....67	57.11.3392	3.9 KOhm	1%, 0.25W, MF		
	R....68	57.11.3474	470 KOhm	1%, 0.25W, MF		
	R....69	57.11.3104	100 KOhm	1%, 0.25W, MF		
	R....70	57.11.3103	10 KOhm	1%, 0.25W, MF		
	R....71	57.11.3510	51 Ohm	1%, 0.25W, MF		
	R....72	57.11.3104	100 kOhm	1%, 0.25W, MF		
	R....73	57.11.3392	3.9 KOhm	1%, 0.25W, MF		
	R....74	57.11.5106	10 MOhm	5%, 0.25W, MF		
	R....75	57.11.5106	10 MOhm	5%, 0.25W, MF		
	R....76	57.11.5106	10 MOhm	5%, 0.25W, MF		
	R....77	57.11.5106	10 MOhm	5%, 0.25W, MF		
	R....78	57.11.3103	10 KOhm	1%, 0.25W, MF		
	R....79	57.11.3223	22 KOhm	1%, 0.25W, MF		
	R....80	57.11.3223	22 KOhm	1%, 0.25W, MF		
	R....81	57.11.3103	10 KOhm	1%, 0.25W, MF		
	R....82	57.11.3102	1 KOhm	1%, 0.25W, MF		
	R....83	57.11.3272	2.7 KOhm	1%, 0.25W, MF		
	R....84	57.11.3272	2.7 KOhm	1%, 0.25W, MF		
	R....85	57.11.3682	6.8 KOhm	1%, 0.25W, MF		
	R....86	57.11.3104	100 KOhm	1%, 0.25W, MF		
	R....87	57.11.3104	100 KOhm	1%, 0.25W, MF		
	R....88	57.11.3102	1 KOhm	1%, 0.25W, MF		
	R....89	57.11.3162	1.6 KOhm	1%, 0.25W, MF		
	R....90	57.11.3473	47 KOhm	1%, 0.25W, MF		
	R....91	57.11.3513	51 KOhm	1%, 0.25W, MF		
	R....92	57.11.5106	10 MOhm	5%, 0.25W, MF		
	R....93	57.11.3223	22 KOhm	1%, 0.25W, MF		
	R....94	57.11.3271	270 Ohm	1%, 0.25W, MF		
	R....96	57.11.3223	22 KOhm	1%, 0.25W, MF		
	R....97	57.11.3104	100 KOhm	1%, 0.25W, MF		
	R....98	57.11.3104	100 KOhm	1%, 0.25W, MF		
	R....99	57.11.5106	10 MOhm	5%, 0.25W, MF		
	R...100	57.11.5106	10 MOhm	5%, 0.25W, MF		
	R...210	57.11.3103	10 KOhm	1%, 0.25W, MF		
	R...211	57.11.3223	22 KOhm	1%, 0.25W, MF		
	R...220	57.11.3473	47 KOhm	1%, 0.25W, MF		
	R...221	57.11.3473	47 KOhm	1%, 0.25W, MF		
	R...230	57.11.3104	100 KOhm	1%, 0.25W, MF		
	R...231	57.11.3104	100 KOhm	1%, 0.25W, MF		

1.775.830.00 INPUT UNIT MIC EQUALIZER (CONT.)

Ad	..Pos..	...Ref.No...	Description	
	RA....3	58.01.9503	50 KOhm	10%, 0.50W, C
	RA....4	58.01.9503	50 KOhm	10%, 0.50W, C
	RA....5	1.775.830.01	3*47 KOhm	pos.log
	RA....6	1.775.800.03	2*4.7KOhm	lin.
	RA....7	1.775.800.04	2* 22KOhm	lin.
	RA....8	1.369.150.03	1* 10KOhm	pos.log + Switch 1*2u
	RA....9	1.775.330.06	1*4.7KOhm	lin.
	RA...10	1.775.330.07	1* 10KOhm	lin. Fader
	RA...11	58.01.9202	2 KOhm	10%, 0.50W, C
	RA...12	58.01.9202	2 KOhm	10%, 0.50W, C
	RA...13	58.01.9502	5 KOhm	10%, 0.50W, C
	RA...14	58.01.9501	500 Ohm	10%, 0.50W, C
	RA...20	57.92.7012	PTC 300 mA	60V
	RA...21	57.92.7012	PTC 300 mA	60V
	S.....1	1.775.800.01	Switch	1Step/2Pos.
	X.....1	53.03.0218	4-pole	Socket
	X.....2	53.03.0218	4-pole	Socket
	X.....3	53.03.0218	1-pole	Socket

00 KG 91/08/22

01 UL 91/11/04

EL=Electrolytic,C=Ceramic, PETP=Polyester

MF=Metal Film

MANUFACTURER: dbx=dbx Incorparated,NS=National Semiconductor,Mot=Motorola
RA=Raytheon,SIG=Signetics,TI=Texas Instruments

END

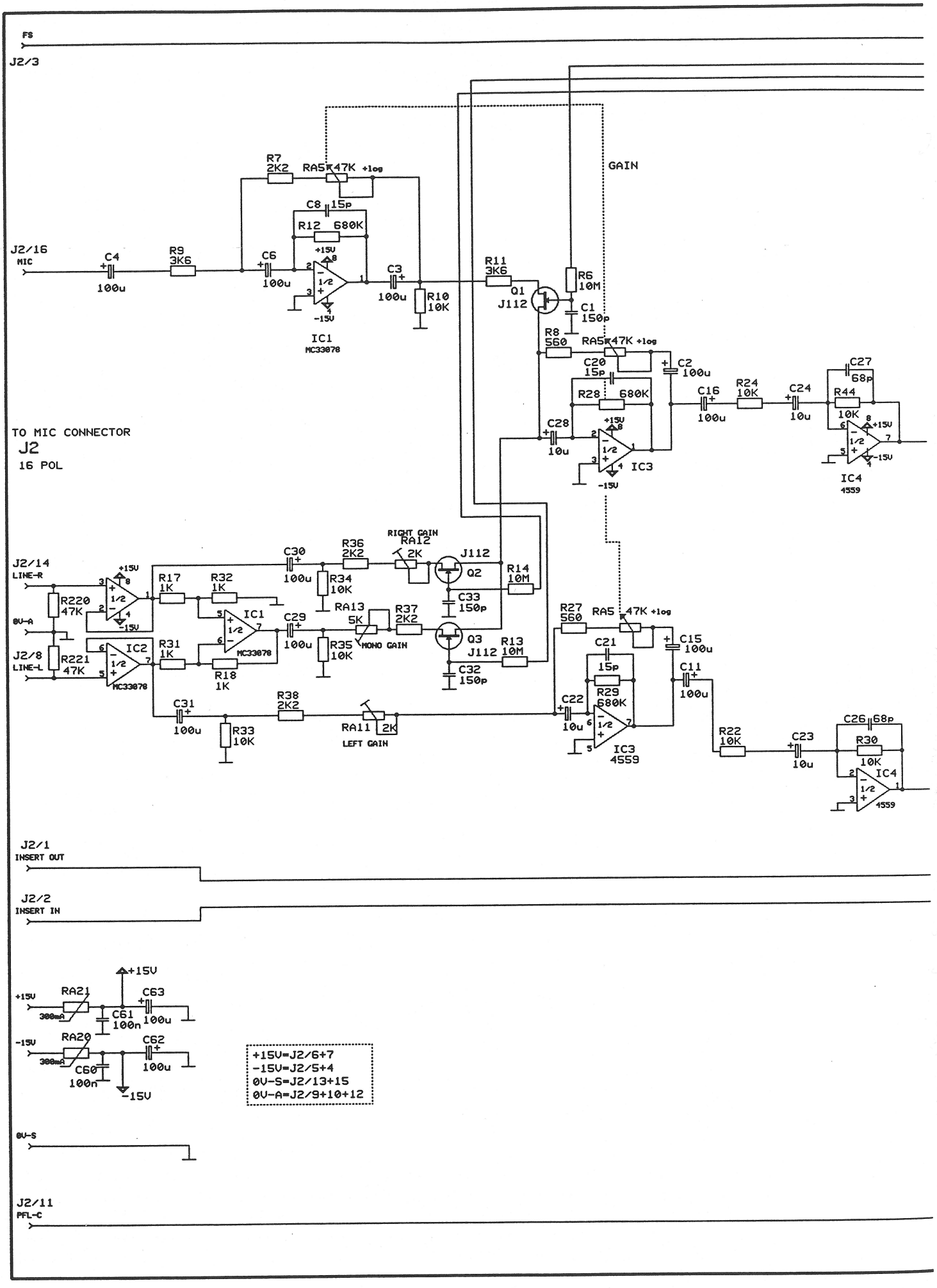
FS
J2/3
J2/16
MIC
C4
100u
R9
3K6
C6
100u
R7
2K2
RA5
47K +log
C8
15p
R12
680K
+15V
-15V
IC1
MC33078
C3
100u
R10
10K
R11
3K6
Q1
J112
R6
10M
C1
150p
GAIN
R8
560
RA5
47K +log
C20
15p
R28
680K
C2
100u
C16
100u
R24
10K
C24
10u
C27
68p
R44
10K
IC3
IC4
4559
-15V
TO MIC CONNECTOR
J2
16 POL
J2/14
LINE-R
0V-A
J2/8
LINE-L
R220
47K
R221
47K
R17
1K
R32
1K
R31
1K
R18
1K
IC1
IC2
MC33078
C30
100u
R36
2K2
RIGHT GAIN
RA12
2K
J112
Q2
R14
10M
R34
10K
C33
150p
RA13
5K
MONO GAIN
R37
2K2
Q3
J112
R13
10M
R35
10K
C29
100u
C32
150p
C31
100u
R38
2K2
RA11
2K
LEFT GAIN
R33
10K
R27
560
RA5
47K +log
C21
15p
R29
680K
C22
10u
C15
100u
C11
100u
R22
10K
C23
10u
C26
68p
R30
10K
IC3
IC4
4559
J2/1
INSERT OUT
J2/2
INSERT IN
+15V
-15V
RA21
RA20
300mA
C61
100n
C60
100n
C63
100u
C62
100u
+15V=J2/6+7
-15V=J2/5+4
0V-S=J2/13+15
0V-A=J2/9+10+12
0V-S
J2/11
PFL-C

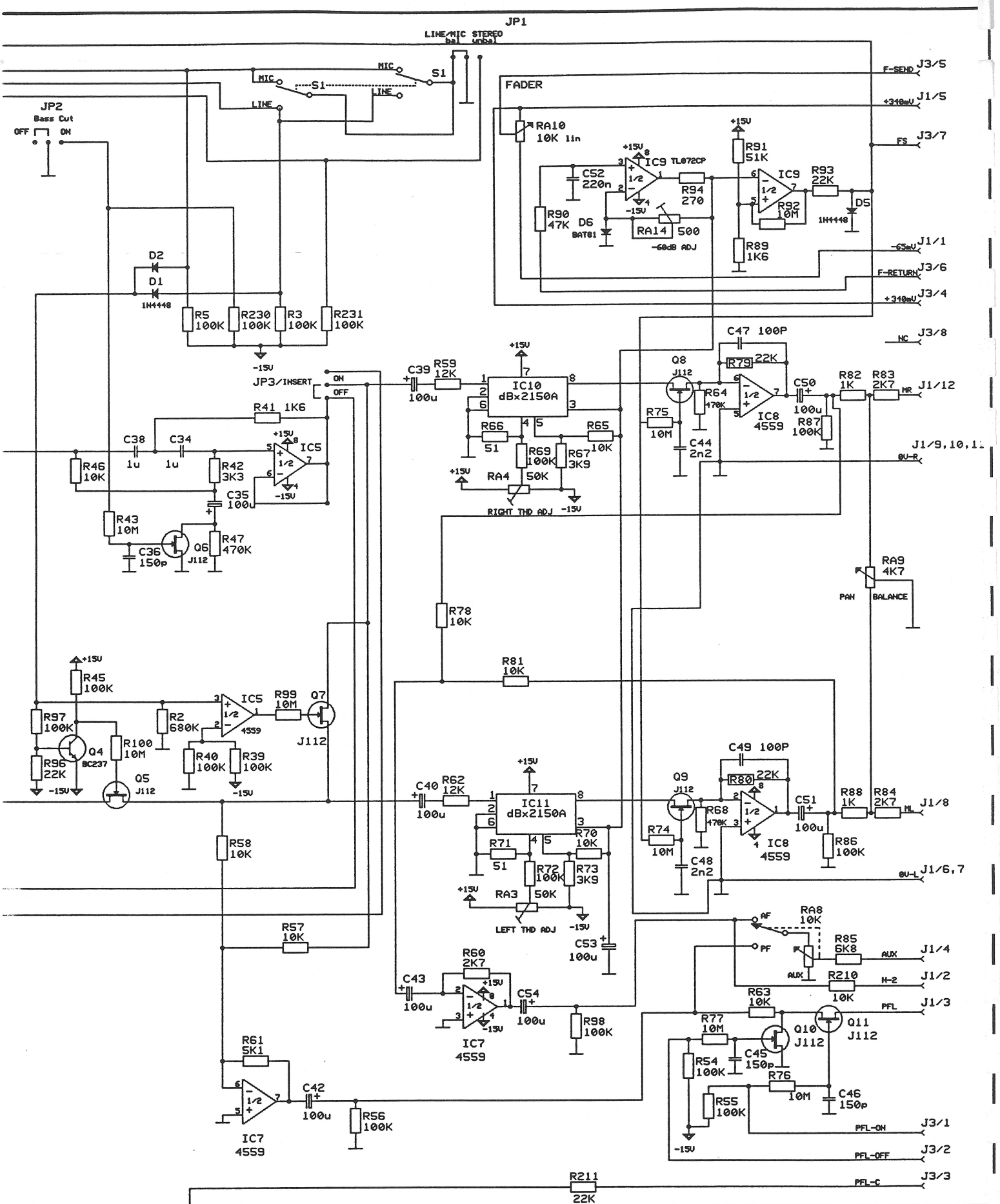

JUL-08-91 MJ	SEP-12-91 UL			
	MIXING CONSOLE MB16			PAGE 1 OF 1
REVOX	INPUT UNIT MIC		SC	1.775.840.00

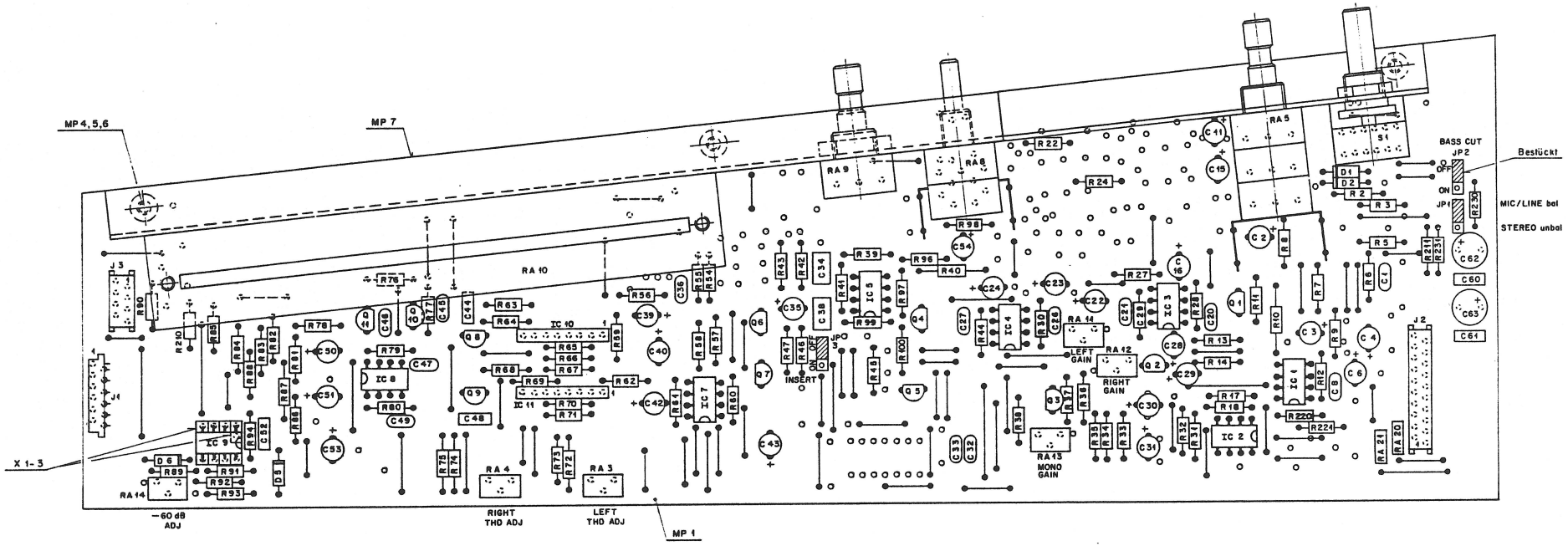

Nr. Etikette / ESE-Warnschild aufgeklebt nach Fabrikationsmuster.

Werkstoff: Norm-Nr.: / DIN-Bez.: / Abmessung:	Oberfläche: Güte: / Ben:		Änderung: ③ ② ①
Zugehörige Unterlagen: PL	Freimasstoleranz: ±	Maßstab: 2:1	Ausgabe: 18.6.91 ⓪
Ersatz für:	Ersetzt durch:		Datum / Gez. / Geor.: / Ges. / Index: Kopie für:
STUDER REGENSDORF ZÜRICH	Benennung: INPUT UNIT MIC. ESE		Nummer: 1.775.840-00

1.775.840.00 INPUT UNIT MIC

Ad	..Pos..	...Ref.No...	Description		
	C.....1	59.34.4151	150 pF	10%, 25V, C	
	C.....2	59.22.3101	100 uF	-20%, 10V, EL	
	C.....3	59.22.3101	100 uF	-20%, 10V, EL	
	C.....4	59.22.3101	100 uF	-20%, 10V, EL	
	C.....6	59.22.3101	100 uF	-20%, 10V, EL	
	C.....8	59.34.1150	15 pF	10%, 25V, C	
	C....11	59.22.3101	100 uF	-20%, 10V, EL	
	C....15	59.22.3101	100 uF	-20%, 10V, EL	
	C....16	59.22.3101	100 uF	-20%, 10V, EL	
	C....20	59.34.1150	15 pF	10%, 25V, C	
	C....21	59.34.1150	15 pF	10%, 25V, C	
	C....22	59.22.6100	10 uF	-20%, 10V, EL	
	C....23	59.22.6100	10 uF	-20%, 10V, EL	
	C....24	59.22.6100	10 uF	-20%, 10V, EL	
	C....26	59.34.4680	68 pF	10%, 25V, C	
	C....27	59.34.4680	68 pF	10%, 25V, C	
	C....28	59.22.6100	10 uF	-20%, 10V, EL	
	C....29	59.22.3101	100 uF	-20%, 10V, EL	
	C....30	59.22.3101	100 uF	-20%, 10V, EL	
	C....31	59.22.3101	100 uF	-20%, 10V, EL	
	C....32	59.34.4151	150 pF	10%, 25V, C	
	C....33	59.34.4151	150 pF	10%, 25V, C	
	C....34	59.06.0105	1 uF	10%, 25V, PETP	
	C....35	59.22.3101	100 uF	-20%, 10V, EL	
	C....36	59.34.4151	150 pF	10%, 25V, C	
	C....38	59.06.0105	1 uF	10%, 25V, PETP	
	C39-C43	59.22.3101	100 uF	-20%, 10V, EL	
	C....40	59.22.3101	100 uF	-20%, 10V, EL	
	C....42	59.22.3101	100 uF	-20%, 10V, EL	
	C....43	59.22.3101	100 uF	-20%, 10V, EL	
	C....44	59.06.0222	2.2 nF	10%, 25V, PETP	
	C....45	59.34.4151	150 pF	10%, 25V, C	
	C....46	59.34.4151	150 pF	10%, 25V, C	
	C....47	59.34.4101	100 pF	10%, 25V, C	
	C....48	59.06.0222	2.2 nF	10%, 25V, PETP	
	C....49	59.34.4101	100 pF	10%, 25V, C	
	C....50	59.22.3101	100 uF	-20%, 10V, EL	
	C....51	59.22.3101	100 uF	-20%, 10V, EL	
	C....52	59.06.5224	220 nF	10%, 25V, PETP	
	C....53	59.22.3101	100 uF	-20%, 10V, EL	
	C....54	59.22.3101	100 uF	-20%, 10V, EL	
	C....60	59.06.0104	100 nF	10%, 25V, PETP	
	C....61	59.06.0104	100 nF	10%, 25V, PETP	
	C....62	59.22.5101	100 uF	-20%, 25V, EL	
	C....63	59.22.5101	100 uF	-20%, 25V, EL	
	D.....1	50.04.0125	1N 4448	any	
	D.....2	50.04.0125	1N 4448	any	
	D.....5	50.04.0125	1N 4448	any	
	D.....6	50.04.0523	BAT 81	Schottky-Diode	
	IC....1	50.09.0117	NC33078P		Mot
	IC....2	50.09.0117	NC33078P		Mot
	IC....3	50.09.0107	RC4559		Ra
	IC....4	50.09.0107	RC4559		Ra
	IC....5	50.09.0107	RC4559		Ra
	IC....7	50.09.0107	RC4559		Ra
	IC....8	50.09.0107	RC4559		Ra
	IC....9	50.09.0101	TL072CP		TI
	IC...10	50.11.0140	dbx2150A	VCA	dbx
	IC...11	50.11.0140	dbx2150A	VCA	dbx
	J.....1	54.14.5532	12-Pole	WinkelbuchsensteckerPrint	Micro-M
	J.....2	54.14.5516	16-Pole	Buchsenstecker	Micro-M
	J.....3	54.14.5508	8-Pole	Buchsenstecker	Micro-M
	JP....1	54.11.0128	Jumper		
	JP....2	54.11.0128	Jumper		
	JP....3	54.11.0128	Jumper		
	MP....1	1.775.800.11		INPUT PCB	
01	MP....1	1.775.800.12		INPUT PCB	
	MP....4	21.38.1352		Screw	
	MP....5	21.38.1352		Screw	
	MP....6	21.38.1352		Screw	
	MP....7	1.775.370.20		U-Profile	
	P.....1	54.01.0020		3 Pin	
	P.....2	54.01.0020		3 Pin	
	P.....3	54.01.0020		3 Pin	
	Q.....1	50.03.0350	J 112	FET	Mot
	Q.....2	50.03.0350	J 112	FET	Mot
	Q.....3	50.03.0350	J 112	FET	Mot
	Q.....4	50.03.0436	BC 237	NPN	Mot
	Q5-Q11	50.03.0350	J 112	FET	Mot
	R.....2	57.11.3684	680 KOhm	1%, 0.25W, MF	
	R.....3	57.11.3104	100 KOhm	1%, 0.25W, MF	
	R.....5	57.11.3104	100 KOhm	1%, 0.25W, MF	
	R.....6	57.11.5106	10 MOhm	5%, 0.25W, MF	
	R.....7	57.11.3222	2.2 KOhm	1%, 0.25W, MF	
	R.....8	57.11.3561	560 Ohm	1%, 0.25W, MF	
	R.....9	57.11.3362	3.6 KOhm	1%, 0.25W, MF	
	R....10	57.11.3103	10 KOhm	1%, 0.25W, MF	
	R....11	57.11.3362	3.6 KOhm	1%, 0.25W, MF	
	R....12	57.11.3684	680 KOhm	1%, 0.25W, MF	
	R....13	57.11.5106	10 MOhm	1%, 0.25W, MF	
	R....14	57.11.5106	10 MOhm	5%, 0.25W, MF	
	R....17	57.11.3102	1 KOhm	1%, 0.25W, MF	
	R....18	57.11.3102	1 KOhm	1%, 0.25W, MF	
	R....22	57.11.3103	10 KOhm	1%, 0.25W, MF	
	R....24	57.11.3103	10 KOhm	1%, 0.25W, MF	
	R....27	57.11.3561	560 Ohm	1%, 0.25W, MF	
	R....28	57.11.3684	680 KOhm	1%, 0.25W, MF	
	R....29	57.11.3684	680 KOhm	1%, 0.25W, MF	
	R....30	57.11.3103	10 KOhm	1%, 0.25W, MF	
	R....31	57.11.3102	1 KOhm	1%, 0.25W, MF	
	R....32	57.11.3102	1 KOhm	1%, 0.25W, MF	
	R....33	57.11.3103	10 KOhm	1%, 0.25W, MF	
	R....34	57.11.3103	10 KOhm	1%, 0.25W, MF	
	R....35	57.11.3103	10 KOhm	1%, 0.25W, MF	
	R....36	57.11.3222	2.2 KOhm	1%, 0.25W, MF	
	R....37	57.11.3222	2.2 KOhm	1%, 0.25W, MF	
	R....38	57.11.3222	2.2 KOhm	1%, 0.25W, MF	
	R....39	57.11.3104	100 KOhm	1%, 0.25W, MF	
	R....40	57.11.3104	100 KOhm	1%, 0.25W, MF	
	R....41	57.11.3162	1.6 KOhm	1%, 0.25W, MF	
	R....42	57.11.3332	3.3K Ohm	1%, 0.25W, MF	
	R....43	57.11.5106	10 MOhm	5%, 0.25W, MF	
	R....44	57.11.3103	10 KOhm	1%, 0.25W, MF	
	R....45	57.11.3104	100 KOhm	1%, 0.25W, MF	
	R....46	57.11.3103	10 KOhm	1%, 0.25W, MF	
	R....47	57.11.3474	470 KOhm	1%, 0.25W, MF	
	R....54	57.11.3104	100 KOhm	1%, 0.25W, MF	
	R....55	57.11.3104	100 KOhm	1%, 0.25W, MF	
	R....56	57.11.3104	100 KOhm	1%, 0.25W, MF	
	R....57	57.11.3103	10 KOhm	1%, 0.25W, MF	
	R....58	57.11.3103	10 KOhm	1%, 0.25W, MF	
	R....59	57.11.3123	12 KOhm	1%, 0.25W, MF	
	R....60	57.11.3272	2.7 KOhm	1%, 0.25W, MF	
	R....61	57.11.3512	5.1 KOhm	1%, 0.25W, MF	
	R....62	57.11.3123	12 KOhm	1%, 0.25W, MF	
	R....63	57.11.3103	10 KOhm	1%, 0.25W, MF	
	R....64	57.11.3474	470 KOhm	1%, 0.25W, MF	
	R....65	57.11.3103	10 KOhm	1%, 0.25W, MF	
	R....66	57.11.3510	51 Ohm	1%, 0.25W, MF	
	R....67	57.11.3392	3.9 KOhm	1%, 0.25W, MF	
	R....68	57.11.3474	470 KOhm	1%, 0.25W, MF	
	R....69	57.11.3104	100 KOhm	1%, 0.25W, MF	
	R....70	57.11.3103	10 KOhm	1%, 0.25W, MF	
	R....71	57.11.3510	51 Ohm	1%, 0.25W, MF	
	R....72	57.11.3104	100 kOhm	1%, 0.25W, MF	
	R....73	57.11.3392	3.9 KOhm	1%, 0.25W, MF	
	R....74	57.11.5106	10 MOhm	5%, 0.25W, MF	
	R....75	57.11.5106	10 MOhm	5%, 0.25W, MF	
	R....76	57.11.5106	10 MOhm	5%, 0.25W, MF	
	R....77	57.11.5106	10 MOhm	5%, 0.25W, MF	
	R....78	57.11.3103	10 KOhm	1%, 0.25W, MF	
	R....79	57.11.3223	22 KOhm	1%, 0.25W, MF	
	R....80	57.11.3223	22 KOhm	1%, 0.25W, MF	
	R....81	57.11.3103	10 KOhm	1%, 0.25W, MF	
	R....82	57.11.3102	1 KOhm	1%, 0.25W, MF	
	R....83	57.11.3272	2.7 KOhm	1%, 0.25W, MF	
	R....84	57.11.3272	2.7 KOhm	1%, 0.25W, MF	
	R....85	57.11.3682	6.8 KOhm	1%, 0.25W, MF	
	R....86	57.11.3104	100 KOhm	1%, 0.25W, MF	
	R....87	57.11.3104	100 KOhm	1%, 0.25W, MF	
	R....88	57.11.3102	1 KOhm	1%, 0.25W, MF	
	R....89	57.11.3162	1.6 KOhm	1%, 0.25W, MF	
	R....90	57.11.3473	47 KOhm	1%, 0.25W, MF	
	R....91	57.11.3513	51 KOhm	1%, 0.25W, MF	
	R....92	57.11.5106	10 MOhm	5%, 0.25W, MF	
	R....93	57.11.3223	22 KOhm	1%, 0.25W, MF	
	R....94	57.11.3271	270 Ohm	1%, 0.25W, MF	
	R....96	57.11.3223	22 KOhm	1%, 0.25W, MF	
	R....97	57.11.3104	100 KOhm	1%, 0.25W, MF	
	R....98	57.11.3104	100 KOhm	1%, 0.25W, MF	
	R....99	57.11.5106	10 MOhm	5%, 0.25W, MF	
	R...100	57.11.5106	10 MOhm	5%, 0.25W, MF	
	R...210	57.11.3103	10 KOhm	1%, 0.25W, MF	
	R...211	57.11.3223	22 KOhm	1%, 0.25W, MF	
	R...220	57.11.3473	47 KOhm	1%, 0.25W, MF	
	R...221	57.11.3473	47 KOhm	1%, 0.25W, MF	
	R...230	57.11.3104	100 KOhm	1%, 0.25W, MF	
	R...231	57.11.3104	100 KOhm	1%, 0.25W, MF	
	RA....3	58.01.9503	50 KOhm	10%, 0.50W, C	
	RA....4	58.01.9503	50 KOhm	10%, 0.50W, C	
	RA....5	1.775.830.01	3*47 KOhm	pos.log	
	RA....8	1.369.150.03	1* 10KOhm	pos.log + Switch 1*2u	
	RA....9	1.775.330.06	1*4.7KOhm	lin.	
	RA...10	1.775.330.07	1* 10KOhm	lin. Fader	
	RA...11	58.01.9202	2 KOhm	10%, 0.50W, C	
	RA...12	58.01.9202	2 KOhm	10%, 0.50W, C	
	RA...13	58.01.9502	5 KOhm	10%, 0.50W, C	
	RA...14	58.01.9501	500 Ohm	10%, 0.50W, C	
	RA...20	57.92.7012	PTC 300	mA 60V	
	RA...21	57.92.7012	PTC 300	mA 60V	
	S.....1	1.775.800.01	Switch	1Step/2Pos.	
	X.....1	53.03.0218	4-pole	Socket	
	X.....2	53.03.0218	4-pole	Socket	
	X.....3	53.03.0218	1-pole	Socket	

00 KG 91/08/22
01 UL 91/11/04

EL=Electrolytic,C=Ceramic, PETP=Polyester,MF=Metal Film

MANUFACTURER: dbx=dbx Incorparated,NS=National Semiconductor,Mot=Motorola
RA=Raytheon,SIG=Signetics,TI=Texas Instruments

END

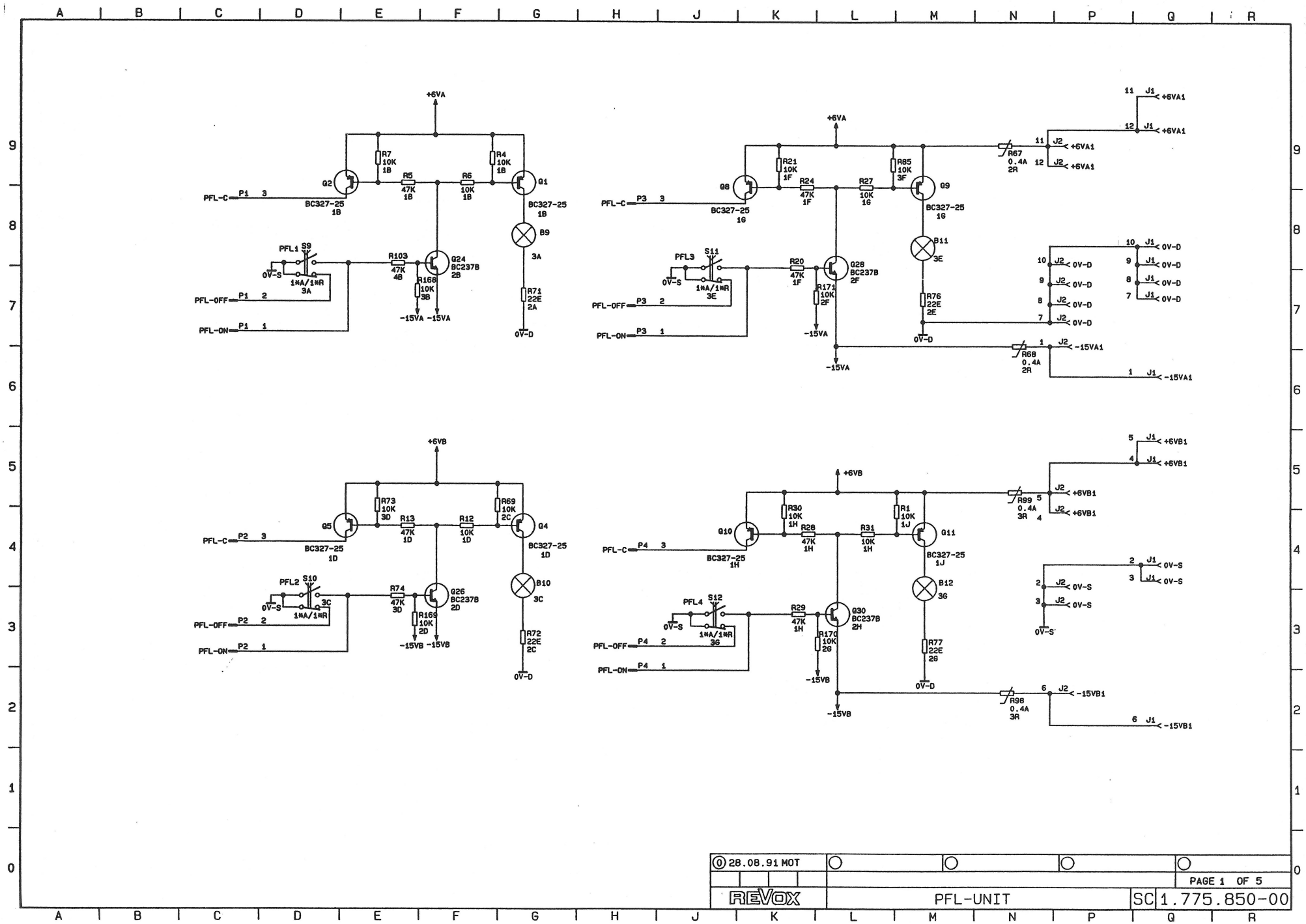

⓪ 28.08.91 MOT					
					PAGE 1 OF 5
REVOX	PFL-UNIT			SC	1.775.850-00

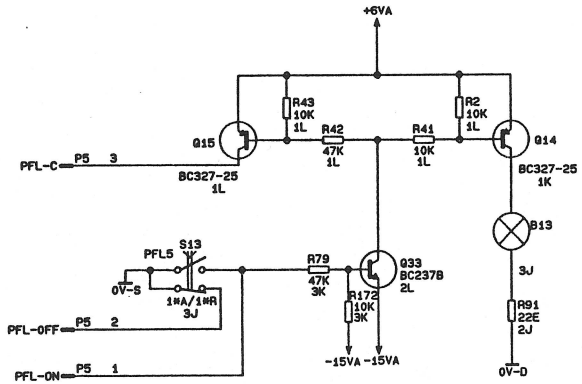

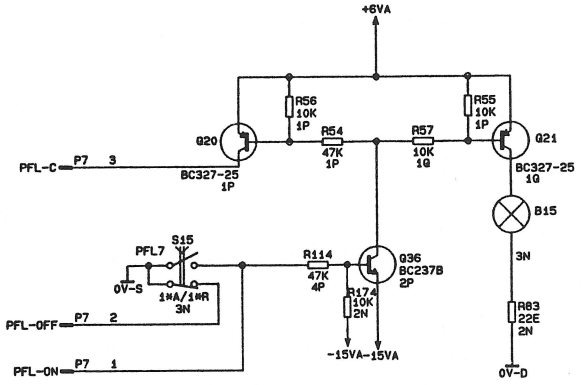

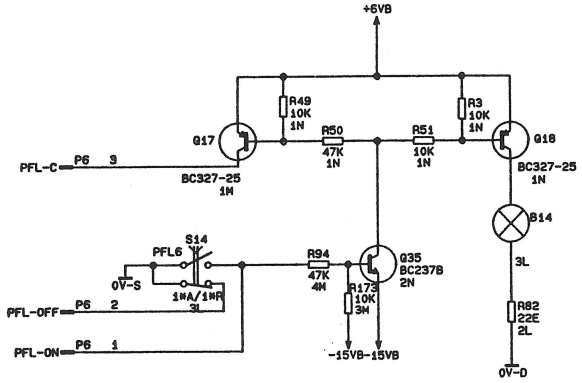

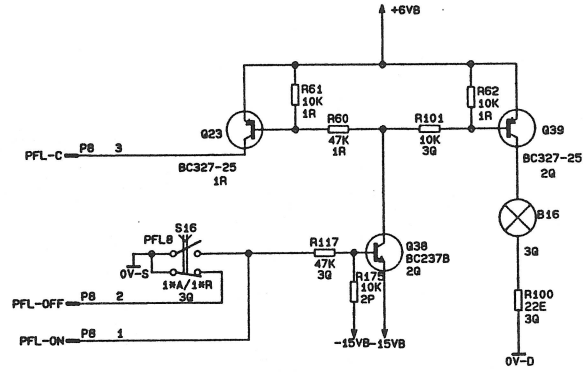

⓪ 28.08.91 MOT					PAGE 2 OF 5
REVOX	PFL-UNIT			SC	1.775.850-00

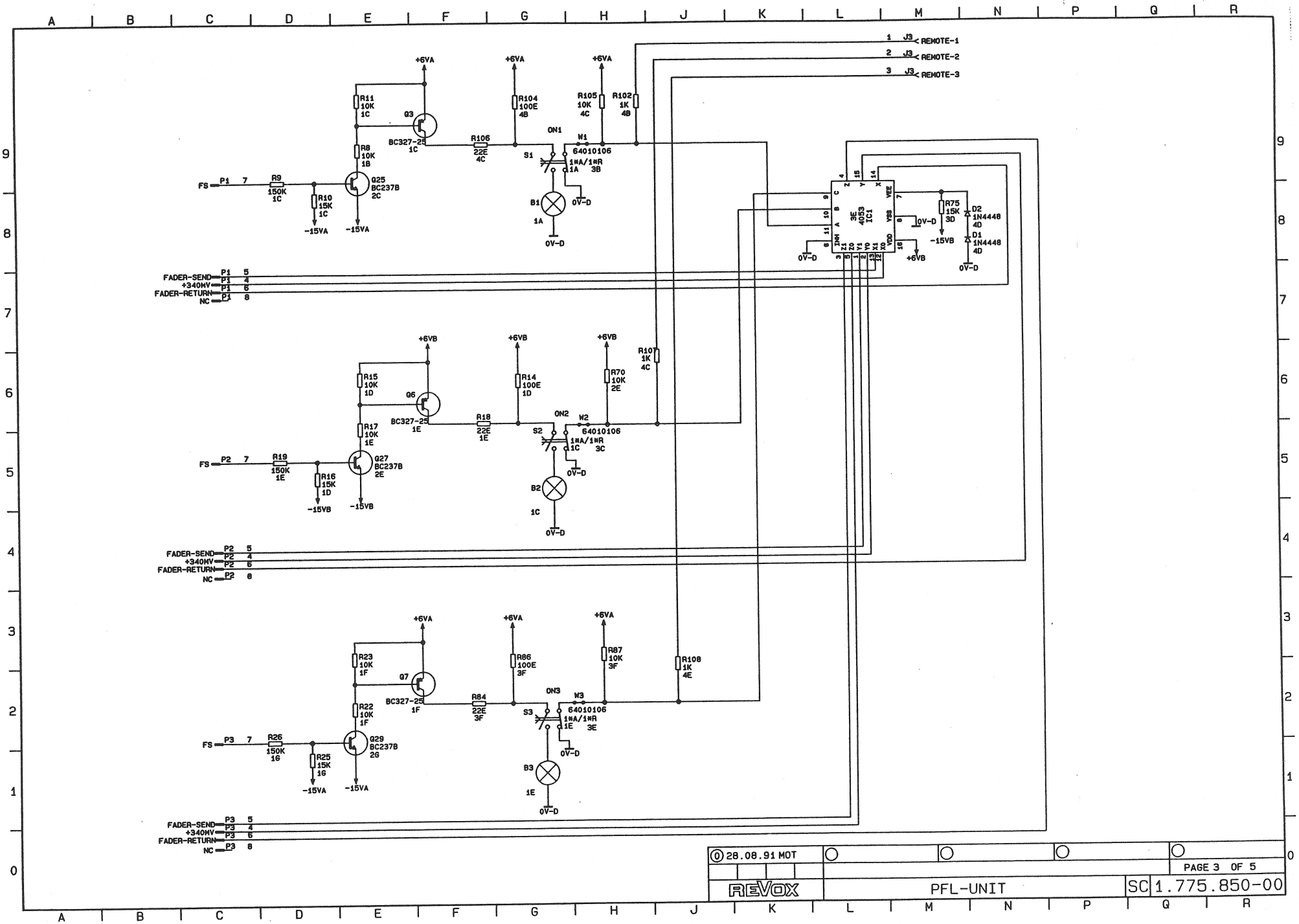

⓪ 28.08.91 MOT				PAGE 3 OF 5
REVOX	PFL-UNIT		SC	1.775.850-00

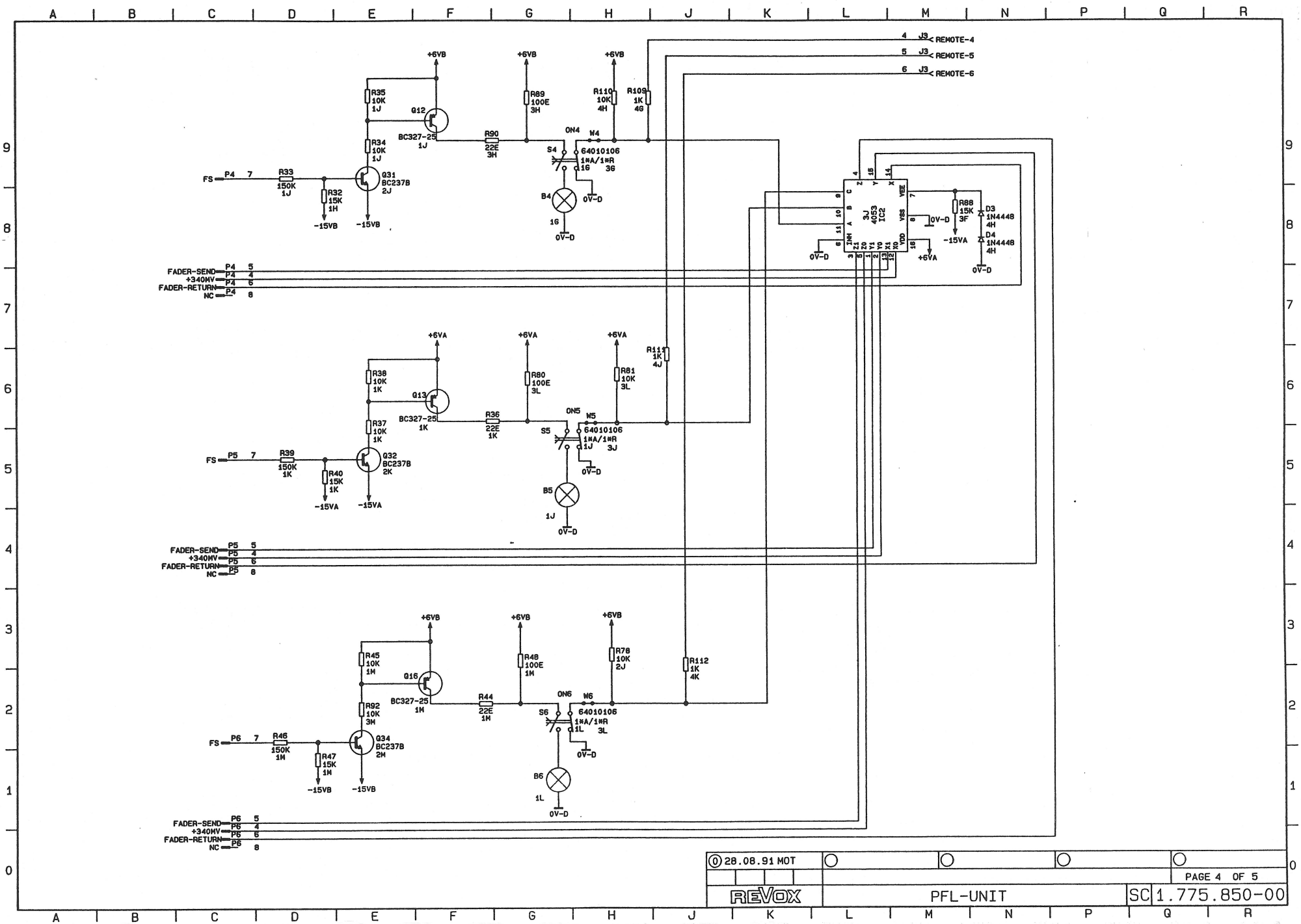

⓪ 28.08.91 MOT					PAGE 4 OF 5
REVOX	PFL-UNIT			SC	1.775.850-00

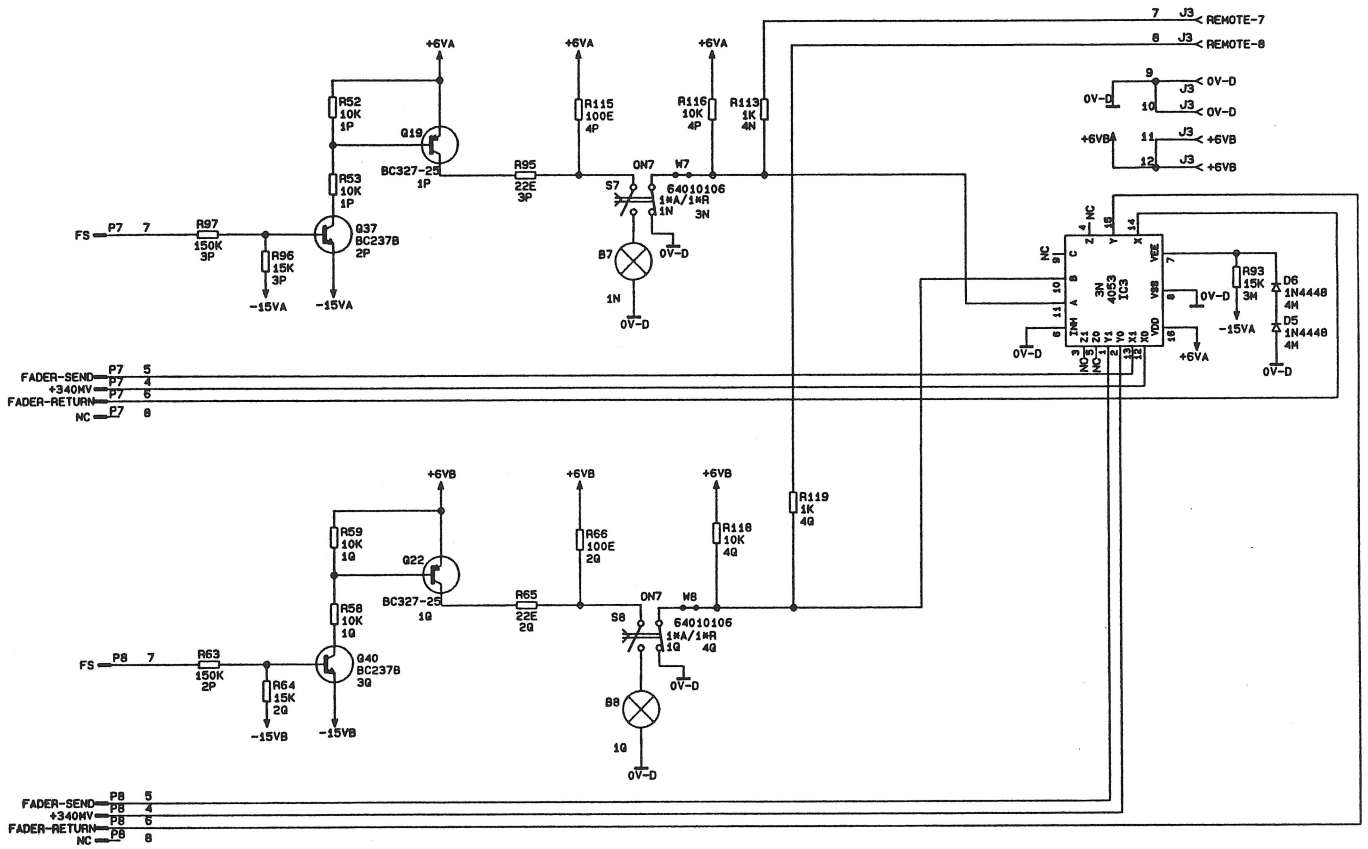

⓪ 28.08.91 MOT					PAGE 5 OF 5
REVOX	PFL-UNIT			SC	1.775.850-00

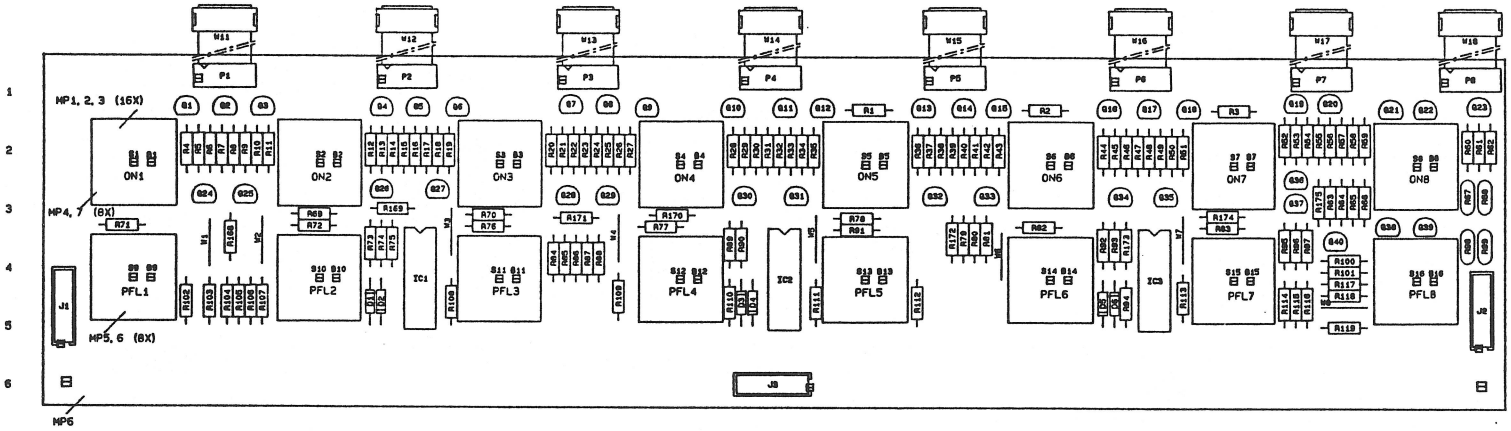

NR. ETIKETTE / ESE-WARNSCHILD

AUFGEKLEBT NACH FABRIKATIONSMUSTER

⓪ 28.08.91 MOT				
				PAGE BP OF
REVOX	PFL-UNIT		BP	1.775.850-00

1.775.850.00 PFL UNIT

Ad	..Pos..	...Ref.No...	Description				
	B.....1	51.02.0154	Lamp	Bi-Pin, 5V, 40mA			
	B.....2	51.02.0154	Lamp	Bi-Pin, 5V, 40mA			
	B.....3	51.02.0154	Lamp	Bi-Pin, 5V, 40mA			
	B.....4	51.02.0154	Lamp	Bi-Pin, 5V, 40mA			
	B.....5	51.02.0154	Lamp	Bi-Pin, 5V, 40mA			
	B.....6	51.02.0154	Lamp	Bi-Pin, 5V, 40mA			
	B.....7	51.02.0154	Lamp	Bi-Pin, 5V, 40mA			
	B.....8	51.02.0154	Lamp	Bi-Pin, 5V, 40mA			
	B.....9	51.02.0154	Lamp	Bi-Pin, 5V, 40mA			
	B....10	51.02.0154	Lamp	Bi-Pin, 5V, 40mA			
	B....11	51.02.0154	Lamp	Bi-Pin, 5V, 40mA			
	B....12	51.02.0154	Lamp	Bi-Pin, 5V, 40mA			
	B....13	51.02.0154	Lamp	Bi-Pin, 5V, 40mA			
	B....14	51.02.0154	Lamp	Bi-Pin, 5V, 40mA			
	B....15	51.02.0154	Lamp	Bi-Pin, 5V, 40mA			
	B....16	51.02.0154	Lamp	Bi-Pin, 5V, 40mA			
	D.....1	50.04.0125	1N4448	DO35,RECTIFIER			
	D.....2	50.04.0125	1N4448	DO35,RECTIFIER			
	D.....3	50.04.0125	1N4448	DO35,RECTIFIER			
	D.....4	50.04.0125	1N4448	DO35,RECTIFIER			
	D.....5	50.04.0125	1N4448	DO35,RECTIFIER			
	D.....6	50.04.0125	1N4448	DO35,RECTIFIER			
	IC....1	50.07.0015	4053	DIP16, TRIP. 2-CH. ANA. MUX/DEMU			
	IC....2	50.07.0015	4053	DIP16, TRIP. 2-CH. ANA. MUX/DEMU			
	IC....3	50.07.0015	4053	DIP16, TRIP. 2-CH. ANA. MUX/DEMU			
	J.....1	54.14.5512	12-P	VERT, FEM., J-MICRO-MATCH			
	J.....2	54.14.5512	12-P	VERT, FEM., J-MICRO-MATCH			
	J.....3	54.14.5512	12-P	VERT, FEM., J-MICRO-MATCH			
	MP....1	55.15.0228	16 pcs	Push-button knob			
	MP....2	55.15.0221	16 pcs	Push-button assembly, white			
	MP....3	55.15.0205	16 pcs	Push-button assembly, concave			
	MP....4	55.15.0212	8 pcs	Push-button assembly, red			
	MP....5	55.15.0215	8 pcs	Push-button assembly, green			
	MP....6	1.970.700.05	8 pcs	Foil, PFL			
	MP....7	1.970.700.06	8 pcs	Foil, ON			
	MP....8	1.775.850.11		PFL Unit PCB			
	P.....1	54.14.5608	8-P	STR., MALE, P-MICRO-MATCH-CONN			
	P.....2	54.14.5608	8-P	STR., MALE, P-MICRO-MATCH-CONN			
	P.....3	54.14.5608	8-P	STR., MALE, P-MICRO-MATCH-CONN			
	P.....4	54.14.5608	8-P	STR., MALE, P-MICRO-MATCH-CONN			
	P.....5	54.14.5608	8-P	STR., MALE, P-MICRO-MATCH-CONN			
	P.....6	54.14.5608	8-P	STR., MALE, P-MICRO-MATCH-CONN			
	P.....7	54.14.5608	8-P	STR., MALE, P-MICRO-MATCH-CONN			
	P.....8	54.14.5608	8-P	STR., MALE, P-MICRO-MATCH-CONN			
	Q.....1	50.03.0351	BC327-25	PNP, TO92-1			
	Q.....2	50.03.0351	BC327-25	PNP, TO92-1			
	Q.....3	50.03.0351	BC327-25	PNP, TO92-1			
	Q.....4	50.03.0351	BC327-25	PNP, TO92-1			
	Q.....5	50.03.0351	BC327-25	PNP, TO92-1			
	Q.....6	50.03.0351	BC327-25	PNP, TO92-1			
	Q.....7	50.03.0351	BC327-25	PNP, TO92-1			
	Q.....8	50.03.0351	BC327-25	PNP, TO92-1			
	Q.....9	50.03.0351	BC327-25	PNP, TO92-1			
	Q....10	50.03.0351	BC327-25	PNP, TO92-1			
	Q....11	50.03.0351	BC327-25	PNP, TO92-1			
	Q....12	50.03.0351	BC327-25	PNP, TO92-1			
	Q....13	50.03.0351	BC327-25	PNP, TO92-1			
	Q....14	50.03.0351	BC327-25	PNP, TO92-1			
	Q....15	50.03.0351	BC327-25	PNP, TO92-1			
	Q....16	50.03.0351	BC327-25	PNP, TO92-1			
	Q....17	50.03.0351	BC327-25	PNP, TO92-1			
	Q....18	50.03.0351	BC327-25	PNP, TO92-1			
	Q....19	50.03.0351	BC327-25	PNP, TO92-1			
	Q....20	50.03.0351	BC327-25	PNP, TO92-1			
	Q....21	50.03.0351	BC327-25	PNP, TO92-1			
	Q....22	50.03.0351	BC327-25	PNP, TO92-1			
	Q....23	50.03.0351	BC327-25	PNP, TO92-1			
	Q....24	50.03.0436	BC237B	NPN, TO92-1			
	Q....25	50.03.0436	BC237B	NPN, TO92-1			
	Q....26	50.03.0436	BC237B	NPN, TO92-1			
	Q....27	50.03.0436	BC237B	NPN, TO92-1			
	Q....28	50.03.0436	BC237B	NPN, TO92-1			
	Q....29	50.03.0436	BC237B	NPN, TO92-1			
	Q....30	50.03.0436	BC237B	NPN, TO92-1			
	Q....31	50.03.0436	BC237B	NPN, TO92-1			
	Q....32	50.03.0436	BC237B	NPN, TO92-1			
	Q....33	50.03.0436	BC237B	NPN, TO92-1			
	Q....34	50.03.0436	BC237B	NPN, TO92-1			
	Q....35	50.03.0436	BC237B	NPN, TO92-1			
	Q....36	50.03.0436	BC237B	NPN, TO92-1			
	Q....37	50.03.0436	BC237B	NPN, TO92-1			
	Q....38	50.03.0436	BC237B	NPN, TO92-1			
	Q....39	50.03.0351	BC327-25	PNP, TO92-1			
	Q....40	50.03.0436	BC237B	NPN, TO92-1			
	R.....1	57.11.3103	10k	1 %,	0.6W,	MF	
	R.....2	57.11.3103	10k	1 %,	0.6W,	MF	
	R.....3	57.11.3103	10k	1 %,	0.6W,	MF	
	R.....4	57.11.3103	10k	1 %,	0.6W,	MF	
	R.....5	57.11.3473	47k	1 %,	0.6W,	MF	
	R.....6	57.11.3103	10k	1 %,	0.6W,	MF	
	R.....7	57.11.3103	10k	1 %,	0.6W,	MF	
	R.....8	57.11.3103	10k	1 %,	0.6W,	MF	
	R.....9	57.11.3154	150k	1 %,	0.6W,	MF	
	R....10	57.11.3153	15k	1 %,	0.6W,	MF	
	R....11	57.11.3103	10k	1 %,	0.6W,	MF	
	R....12	57.11.3103	10k	1 %,	0.6W,	MF	
	R....13	57.11.3473	47k	1 %,	0.6W,	MF	
	R....14	57.11.3101	100E	1 %,	0.6W,	MF	
	R....15	57.11.3103	10k	1 %,	0.6W,	MF	
	R....16	57.11.3153	15k	1 %,	0.6W,	MF	
	R....17	57.11.3103	10k	1 %,	0.6W,	MF	
	R....18	57.11.3220	22E	1 %,	0.6W,	MF	
	R....19	57.11.3154	150k	1 %,	0.6W,	MF	
	R....20	57.11.3473	47k	1 %,	0.6W,	MF	
	R....21	57.11.3103	10k	1 %,	0.6W,	MF	
	R....22	57.11.3103	10k	1 %,	0.6W,	MF	
	R....23	57.11.3103	10k	1 %,	0.6W,	MF	
	R....24	57.11.3473	47k	1 %,	0.6W,	MF	
	R....25	57.11.3153	15k	1 %,	0.6W,	MF	
	R....26	57.11.3154	150k	1 %,	0.6W,	MF	
	R....27	57.11.3103	10k	1 %,	0.6W,	MF	
	R....28	57.11.3473	47k	1 %,	0.6W,	MF	
	R....29	57.11.3473	47k	1 %,	0.6W,	MF	
	R....30	57.11.3103	10k	1 %,	0.6W,	MF	
	R....31	57.11.3103	10k	1 %,	0.6W,	MF	
	R....32	57.11.3153	15k	1 %,	0.6W,	MF	
	R....33	57.11.3154	150k	1 %,	0.6W,	MF	
	R....34	57.11.3103	10k	1 %,	0.6W,	MF	
	R....35	57.11.3103	10k	1 %,	0.6W,	MF	
	R....36	57.11.3220	22E	1 %,	0.6W,	MF	
	R....37	57.11.3103	10k	1 %,	0.6W,	MF	
	R....38	57.11.3103	10k	1 %,	0.6W,	MF	
	R....39	57.11.3154	150k	1 %,	0.6W,	MF	
	R....40	57.11.3153	15k	1 %,	0.6W,	MF	
	R....41	57.11.3103	10k	1 %,	0.6W,	MF	
	R....42	57.11.3473	47k	1 %,	0.6W,	MF	
	R....43	57.11.3103	10k	1 %,	0.6W,	MF	
	R....44	57.11.3220	22E	1 %,	0.6W,	MF	
	R....45	57.11.3103	10k	1 %,	0.6W,	MF	
	R....46	57.11.3154	150k	1 %,	0.6W,	MF	
	R....47	57.11.3153	15k	1 %,	0.6W,	MF	
	R....48	57.11.3101	100E	1 %,	0.6W,	MF	
	R....49	57.11.3103	10k	1 %,	0.6W,	MF	
	R....50	57.11.3473	47k	1 %,	0.6W,	MF	
	R....51	57.11.3103	10k	1 %,	0.6W,	MF	
	R....52	57.11.3103	10k	1 %,	0.6W,	MF	
	R....53	57.11.3103	10k	1 %,	0.6W,	MF	
	R....54	57.11.3473	47k	1 %,	0.6W,	MF	
	R....55	57.11.3103	10k	1 %,	0.6W,	MF	
	R....56	57.11.3103	10k	1 %,	0.6W,	MF	
	R....57	57.11.3103	10k	1 %,	0.6W,	MF	
	R....58	57.11.3103	10k	1 %,	0.6W,	MF	
	R....59	57.11.3103	10k	1 %,	0.6W,	MF	
	R....60	57.11.3473	47k	1 %,	0.6W,	MF	
	R....61	57.11.3103	10k	1 %,	0.6W,	MF	
	R....62	57.11.3103	10k	1 %,	0.6W,	MF	
	R....63	57.11.3154	150k	1 %,	0.6W,	MF	
	R....64	57.11.3153	15k	1 %,	0.6W,	MF	
	R....65	57.11.3220	22E	1 %,	0.6W,	MF	
	R....66	57.11.3101	100E	1 %,	0.6W,	MF	
	R....67	57.92.7019	0.4A	60V,	R-PTC		
	R....68	57.92.7019	0.4A	60V,	R-PTC		
	R....69	57.11.3103	10k	1 %,	0.6W,	MF	
	R....70	57.11.3103	10k	1 %,	0.6W,	MF	
	R....71	57.11.3220	22E	1 %,	0.6W,	MF	
	R....72	57.11.3220	22E	1 %,	0.6W,	MF	
	R....73	57.11.3103	10k	1 %,	0.6W,	MF	
	R....74	57.11.3473	47k	1 %,	0.6W,	MF	
	R....75	57.11.3153	15k	1 %,	0.6W,	MF	
	R....76	57.11.3220	22E	1 %,	0.6W,	MF	
	R....77	57.11.3220	22E	1 %,	0.6W,	MF	
	R....78	57.11.3103	10k	1 %,	0.6W,	MF	
	R....79	57.11.3473	47k	1 %,	0.6W,	MF	
	R....80	57.11.3101	100E	1 %,	0.6W,	MF	
	R....81	57.11.3103	10k	1 %,	0.6W,	MF	
	R....82	57.11.3220	22E	1 %,	0.6W,	MF	
	R....83	57.11.3220	22E	1 %,	0.6W,	MF	
	R....84	57.11.3220	22E	1 %,	0.6W,	MF	
	R....85	57.11.3103	10k	1 %,	0.6W,	MF	
	R....86	57.11.3101	100E	1 %,	0.6W,	MF	
	R....87	57.11.3103	10k	1 %,	0.6W,	MF	
	R....88	57.11.3153	15k	1 %,	0.6W,	MF	
	R....89	57.11.3101	100E	1 %,	0.6W,	MF	
	R....90	57.11.3220	22E	1 %,	0.6W,	MF	
	R....91	57.11.3220	22E	1 %,	0.6W,	MF	
	R....92	57.11.3103	10k	1 %,	0.6W,	MF	
	R....93	57.11.3153	15k	1 %,	0.6W,	MF	
	R....94	57.11.3473	47k	1 %,	0.6W,	MF	
	R....95	57.11.3220	22E	1 %,	0.6W,	MF	
	R....96	57.11.3153	15k	1 %,	0.6W,	MF	
	R....97	57.11.3154	150k	1 %,	0.6W,	MF	
	R....98	57.92.7019	0.4A	60V,	R-PTC		
	R....99	57.92.7019	0.4A	60V,	R-PTC		
	R...100	57.11.3220	22E	1 %,	0.6W,	MF	
	R...101	57.11.3103	10k	1 %,	0.6W,	MF	
	R...102	57.11.3102	1k	1 %,	0.6W,	MF	

1.775.850.00 PFL UNIT (CONT.)

Ad	..Pos..	...Ref.No...	Description			
	R...103	57.11.3473	47k	1 %,	0.6W,	MF
	R...104	57.11.3101	100E	1 %,	0.6W,	MF
	R...105	57.11.3103	10k	1 %,	0.6W,	MF
	R...106	57.11.3220	22E	1 %,	0.6W,	MF
	R...107	57.11.3102	1k	1 %,	0.6W,	MF
	R...108	57.11.3102	1k	1 %,	0.6W,	MF
	R...109	57.11.3102	1k	1 %,	0.6W,	MF
	R...110	57.11.3103	10k	1 %,	0.6W,	MF
	R...111	57.11.3102	1k	1 %,	0.6W,	MF
	R...112	57.11.3102	1k	1 %,	0.6W,	MF
	R...113	57.11.3102	1k	1 %,	0.6W,	MF
	R...114	57.11.3473	47k	1 %,	0.6W,	MF
	R...115	57.11.3101	100E	1 %,	0.6W,	MF
	R...116	57.11.3103	10k	1 %,	0.6W,	MF
	R...117	57.11.3473	47k	1 %,	0.6W,	MF
	R...118	57.11.3103	10k	1 %,	0.6W,	MF
	R...119	57.11.3102	1k	1 %,	0.6W,	MF
	R...168	57.11.3103	10k	1 %,	0.6W,	MF
	R...169	57.11.3103	10k	1 %,	0.6W,	MF
	R...170	57.11.3103	10k	1 %,	0.6W,	MF
	R...171	57.11.3103	10k	1 %,	0.6W,	MF
	R...172	57.11.3103	10k	1 %,	0.6W,	MF
	R...173	57.11.3103	10k	1 %,	0.6W,	MF
	R...174	57.11.3103	10k	1 %,	0.6W,	MF
	R...175	57.11.3103	10k	1 %,	0.6W,	MF
	S.....1	55.15.0239	1*A/1*R	EAO-KEY-SWITCH		
	S.....2	55.15.0239	1*A/1*R	EAO-KEY-SWITCH		
	S.....3	55.15.0239	1*A/1*R	EAO-KEY-SWITCH		
	S.....4	55.15.0239	1*A/1*R	EAO-KEY-SWITCH		
	S.....5	55.15.0239	1*A/1*R	EAO-KEY-SWITCH		
	S.....6	55.15.0239	1*A/1*R	EAO-KEY-SWITCH		
	S.....7	55.15.0239	1*A/1*R	EAO-KEY-SWITCH		
	S.....8	55.15.0239	1*A/1*R	EAO-KEY-SWITCH		
	S.....9	55.15.0239	1*A/1*R	EAO-KEY-SWITCH		
	S....10	55.15.0239	1*A/1*R	EAO-KEY-SWITCH		
	S....11	55.15.0239	1*A/1*R	EAO-KEY-SWITCH		
	S....12	55.15.0239	1*A/1*R	EAO-KEY-SWITCH		
	S....13	55.15.0239	1*A/1*R	EAO-KEY-SWITCH		
	S....14	55.15.0239	1*A/1*R	EAO-KEY-SWITCH		
	S....15	55.15.0239	1*A/1*R	EAO-KEY-SWITCH		
	S....16	55.15.0239	1*A/1*R	EAO-KEY-SWITCH		
	W.....1	64.01.0106	10.60mm	0.60MM, WIRE BRIDGE		
	W.....2	64.01.0106	10.60mm	0.60MM, WIRE BRIDGE		
	W.....3	64.01.0106	10.60mm	0.60MM, WIRE BRIDGE		
	W.....4	64.01.0106	10.60mm	0.60MM, WIRE BRIDGE		
	W.....5	64.01.0106	10.60mm	0.60MM, WIRE BRIDGE		
	W.....6	64.01.0106	10.60mm	0.60MM, WIRE BRIDGE		
	W.....7	64.01.0106	10.60mm	0.60MM, WIRE BRIDGE		
	W.....8	64.01.0106	10.60mm	0.60MM, WIRE BRIDGE		
	W....11	1.023.390.06	8 pol.	Flatcable		
	W....12	1.023.390.06	8 pol.	Flatcable		
	W....13	1.023.390.06	8 pol.	Flatcable		
	W....14	1.023.390.06	8 pol.	Flatcable		
	W....15	1.023.390.06	8 pol.	Flatcable		
	W....16	1.023.390.06	8 pol.	Flatcable		
	W....17	1.023.390.06	8 pol.	Flatcable		
	W....18	1.023.390.06	8 pol.	Flatcable		

00 KG 91/08/28

EL=Electrolytic,C=Ceramic, PETP=Polyester

MF=Metal Film

MANUFACTURER: dbx=dbx Incorparated,NS=National Semiconductor,Mot=Motorola
RA=Raytheon,SIG=Signetics,TI=Texas Instruments

END

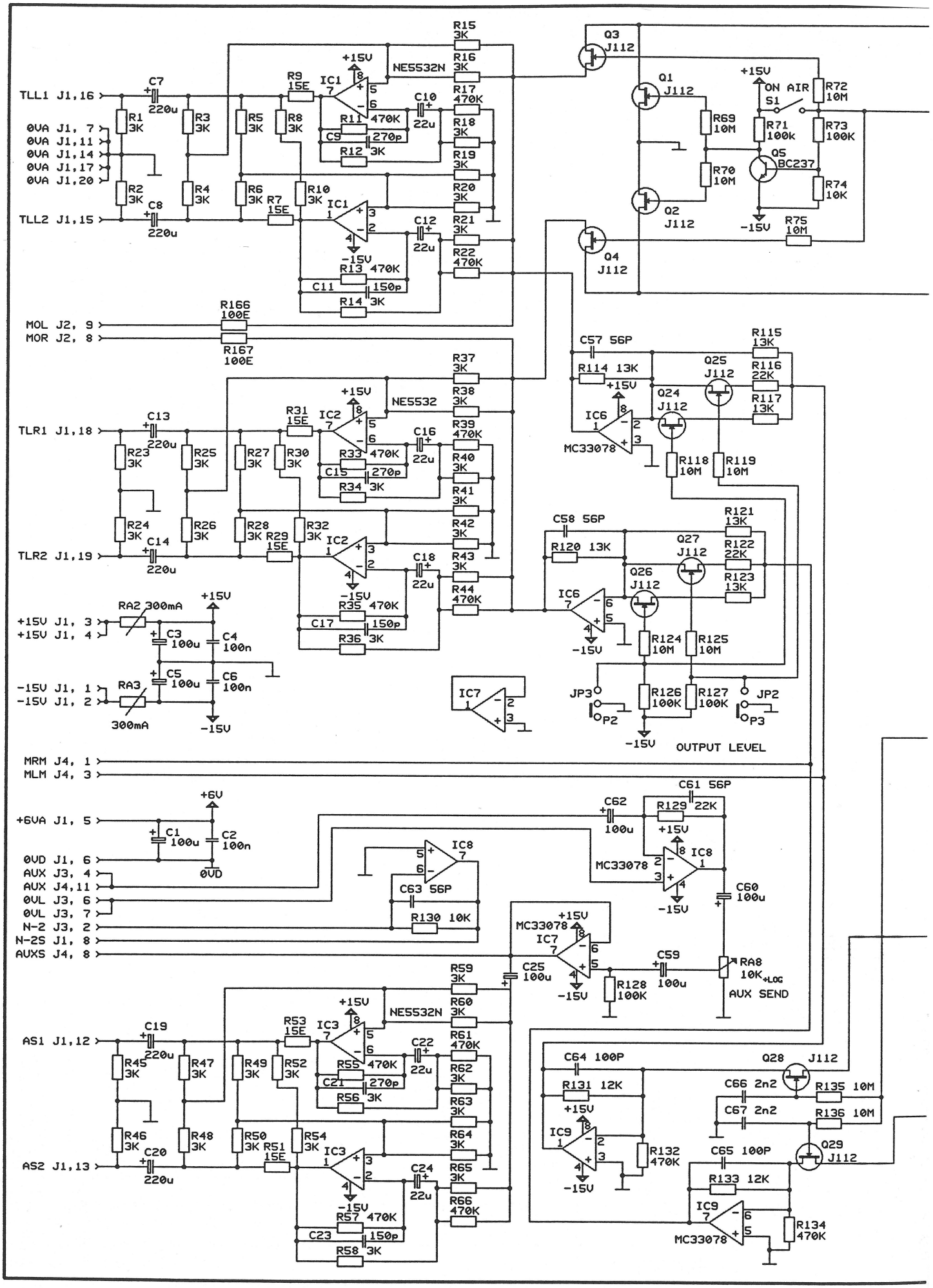
TLL1 J1,16
TLL2 J1,15
0VA J1, 7
0VA J1,11
0VA J1,14
0VA J1,17
0VA J1,20
TLR1 J1,18
TLR2 J1,19
MOL J2, 9
MOR J2, 8
+15V J1, 3
+15V J1, 4
-15V J1, 1
-15V J1, 2
MRM J4, 1
MLM J4, 3
+6VA J1, 5
0VD J1, 6
AUX J3, 4
AUX J4,11
0VL J3, 6
0VL J3, 7
N-2 J3, 2
N-2S J1, 8
AUXS J4, 8
AS1 J1,12
AS2 J1,13
NE5532N
NE5532
MC33078
ON AIR
S1
BC237
OUTPUT LEVEL
AUX SEND
300mA
+LOG

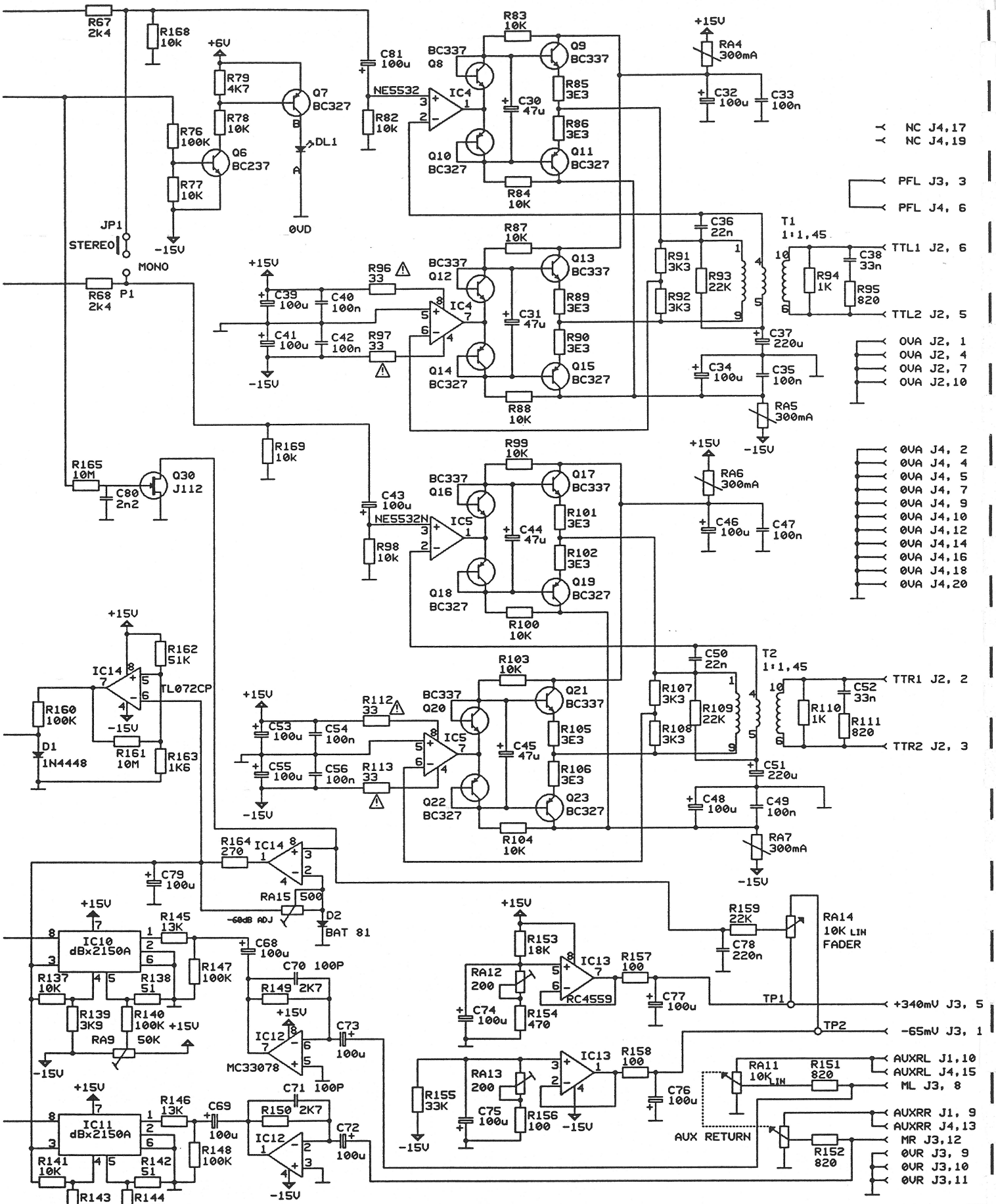

© JUL-2-91 A.T.	SEP-12-91 UL			
	MIXING CONSOLE MB16			PAGE 1 OF 1
REVOX	MASTER UNIT		SC	1.775.860.00

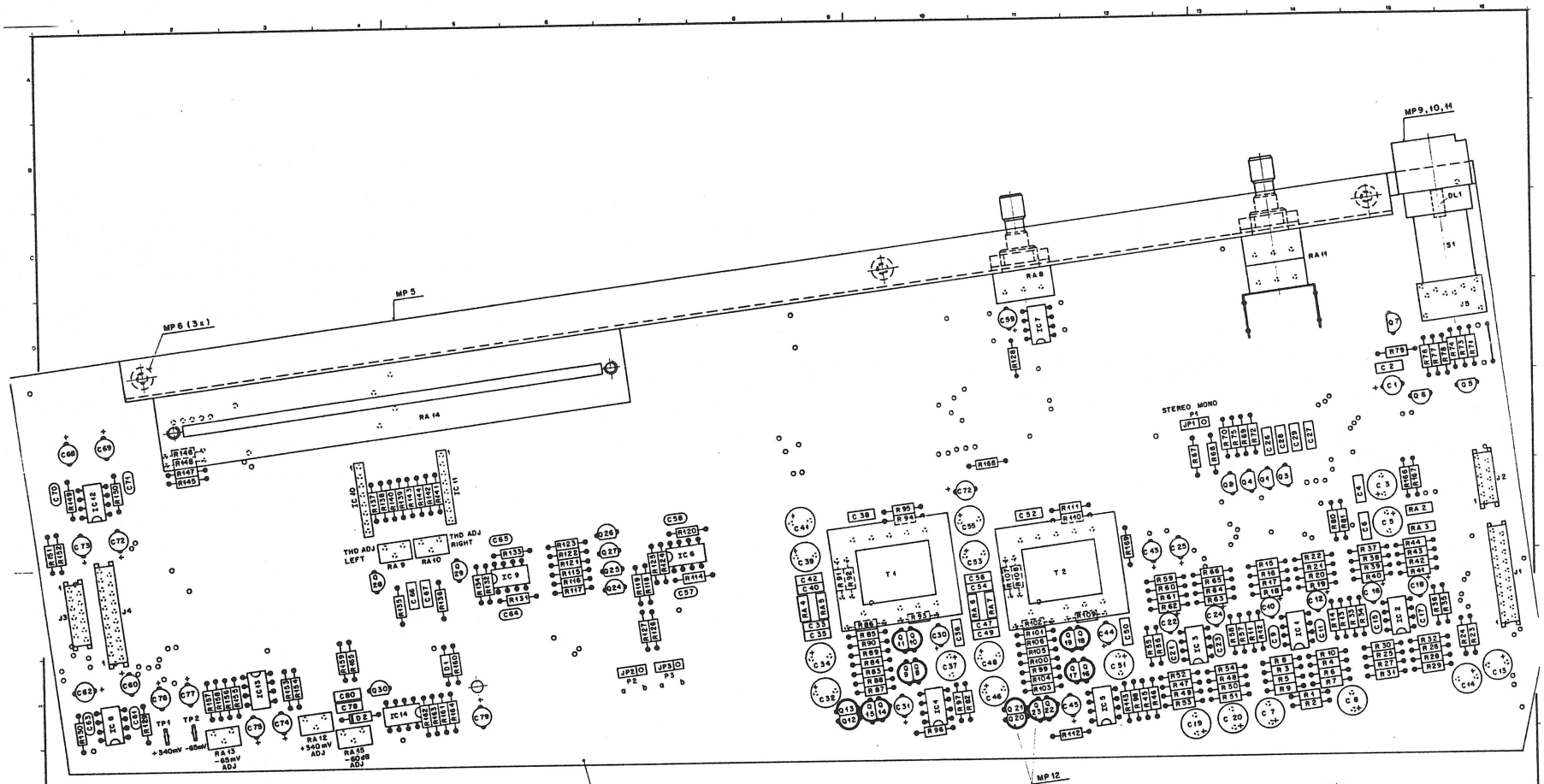

OUTPUT LEVEL BAL	UNBAL	JP2	JP3
+ 6 dBu	0 dBu	a	a
+10 dBu	+ 4 dBu	b	a
+12 dBu	+ 6 dBu	a	b
+14 dBu	+ 8 dBu	b	b

Nr. Etikette / ESE-Warnschild aufgeklebt nach Fabrikationsmuster.

Werkstoff: Norm-Nr.: / DIN-Bez.: / Abmessung:	Oberfläche: Gute: / Behr:		Änderung
Zugehörige Unterlagen: PL	Freimassstoleranz:	Massstab: 2:1	Datum: 22.8.91
Ersatz für:	Ersetzt durch:		Kopie für:
STUDER REGENSDORF ZÜRICH	Benennung: MASTER UNIT ESE		Nummer: 1.775.860-00

1.775.860.00 MASTER UNIT

Ad	..Pos..	...Ref.No...	Description			
	C.....1	59.22.4101	100 uF	-20%, 16V,	EL	
	C.....2	59.06.0104	100 nF	10%, 63V,	PETP	
	C.....3	59.22.5101	100 uF	-20%, 25V,	EL	
	C.....4	59.06.0104	100 nF	10%, 63V,	PETP	
	C.....5	59.22.5101	100 uF	-20%, 25V,	EL	
	C.....6	59.06.0104	100 nF	10%, 63V,	PETP	
	C.....7	59.22.3221	220 uF	-20%, 10V,	EL	
	C.....8	59.22.3221	220 uF	-20%, 10V,	EL	
	C.....9	59.34.4271	270 pF	10%, 25V,	C	
	C....10	59.22.5220	22 uF	-20%, 25V,	EL	
	C....11	59.34.4151	150 pF	10%, 25V,	C	
	C....12	59.22.5220	22 uF	-20%, 25V,	EL	
	C....13	59.22.3221	220 uF	-20%, 10V,	EL	
	C....14	59.22.3221	220 uF	-20%, 10V,	EL	
	C....15	59.34.4271	270 pF	10%, 25V,	C	
	C....16	59.22.5220	22 uF	-20%, 25V,	EL	
	C....17	59.34.4151	150 pF	10%, 25V,	C	
	C....18	59.22.5220	22 uF	-20%, 25V,	EL	
	C....19	59.22.3221	220 uF	-20%, 10V,	EL	
	C....20	59.22.3221	220 uF	-20%, 10V,	EL	
	C....21	59.34.4271	270 pF	10%, 25V,	C	
	C....22	59.22.5220	22 uF	-20%, 25V,	EL	
	C....23	59.34.4151	150 pF	10%, 25V,	C	
	C....24	59.22.5220	22 uF	-20%, 25V,	EL	
	C....25	59.22.3101	100 uF	-20%, 10V,	EL	
	C....26	59.06.0222	2.2 nF	10%, 25V,	PETP	
01	C....26	. .		Not Used		
	C....27	59.06.0222	2.2 nF	10%, 25V,	PETP	
01	C....27	. .		Not Used		
	C....28	59.06.0222	2.2 nF	10%, 25V,	PETP	
01	C....28	. .		Not Used		
	C....29	59.06.0222	2.2 nF	10%, 25V,	PETP	
01	C....29	. .		Not Used		
	C....30	59.22.3470	47 uF	-20%, 10V,	EL	
	C....31	59.22.3470	47 uF	-20%, 10V,	EL	
	C....32	59.22.5101	100 uF	-20%, 25V,	EL	
	C....33	59.06.0104	100 nF	10%, 63V,	PETP	
	C....34	59.22.5101	100 uF	-20%, 25V,	EL	
	C....35	59.06.0104	100 nF	10%, 63V,	PETP	
	C....36	59.06.0223	22 nF	10%, 63V,	PETP	
	C....37	59.22.3221	220 uF	-20%, 10V,	EL	
	C....38	59.06.0333	33 nF	10%, 63V,	PETP	
	C....39	59.22.5101	100 uF	-20%, 25V,	EL	
	C....40	59.06.0104	100 nF	10%, 63V,	PETP	
	C....41	59.22.5101	100 uF	-20%, 25V,	EL	
	C....42	59.06.0104	100 nF	10%, 63V,	PETP	
	C....43	59.22.3101	100 uF	-20%, 10V,	EL	
	C....44	59.22.3470	47 uF	-20%, 10V,	EL	
	C....45	59.22.3470	47 uF	-20%, 10V,	EL	
	C....46	59.22.5101	100 uF	-20%, 25V,	EL	
	C....47	59.06.0104	100 nF	10%, 63V,	PETP	
	C....48	59.22.5101	100 uF	-20%, 25V,	EL	
	C....49	59.06.0104	100 nF	10%, 63V,	PETP	
	C....50	59.06.0223	22 nF	10%, 63V,	PETP	
	C....51	59.22.3221	220 uF	-20%, 10V,	EL	
	C....52	59.06.0333	33 nF	10%, 63V,	PETP	
	C....53	59.22.5101	100 uF	-20%, 25V,	EL	
	C....54	59.06.0104	100 nF	10%, 63V,	PETP	
	C....55	59.22.5101	100 uF	-20%, 25V,	EL	
	C....56	59.06.0104	100 nF	10%, 63V,	PETP	
	C....57	59.34.4560	56 pF	10%, 25V,	C	
	C....58	59.34.4560	56 pF	10%, 25V,	C	
	C....59	59.22.3101	100 uF	-20%, 10V,	EL	
	C....60	59.22.3101	100 uF	-20%, 10V,	EL	
	C....61	59.34.4560	56 pF	10%, 25V,	C	
	C....62	59.22.3101	100 uF	-20%, 10V,	EL	
	C....63	59.34.4560	56 pF	10%, 25V,	C	
	C....64	59.34.4101	100 pF	10%, 25V,	C	
	C....65	59.34.4101	100 pF	10%, 25V,	C	
	C....66	59.06.0222	2.2 nF	10%, 25V,	PETP	
	C....67	59.06.0222	2.2 nF	10%, 25V,	PETP	
	C....68	59.22.3101	100 uF	-20%, 10V,	EL	
	C....69	59.22.3101	100 uF	-20%, 10V,	EL	
	C....70	59.34.4101	100 pF	10%, 25V,	C	
	C....71	59.34.4101	100 pF	10%, 25V,	C	
	C....72	59.22.5101	100 uF	-20%, 25V,	EL	
	C....73	59.22.5101	100 uF	-20%, 25V,	EL	
	C....74	59.22.5101	100 uF	-20%, 25V,	EL	
	C....75	59.22.5101	100 uF	-20%, 25V,	EL	
	C....76	59.22.5101	100 uF	-20%, 25V,	EL	
	C....77	59.22.5101	100 uF	-20%, 25V,	EL	
	C....78	59.06.0224	220 nF	10%, 63V,	PETP	
	C....79	59.22.3101	100 uF	-20%, 10V,	EL	
	C....80	59.06.0222	2.2 nF	10%, 25V,	PETP	
01	C....81	59.22.5101	100 uF	-20%, 25V,	EL	
	D.....1	50.04.0125	1N 4448	Diode		
	D.....2	50.04.0523	Bat 81	Schottky-Diode		
	DL....1	51.02.0600		Multi-LED 6V		
	IC....1	50.09.0106	NE5532AN			NS
	IC....2	50.09.0106	NE5532AN			NS
	IC....3	50.09.0106	NE5532AN			NS
	IC....4	50.09.0106	NE5532AN			NS
	IC....5	50.09.0106	NE5532AN			NS
	IC....6	50.09.0117	MC33078			Mot
	IC....7	50.09.0117	MC33078			Mot
	IC....8	50.09.0117	MC33078			Mot
	IC....9	50.09.0117	MC33078			Ra
	IC...10	50.11.0140	dbx2150A	VCA		dbx
	IC...11	50.11.0140	dbx2150A	VCA		dbx
	IC...12	50.09.0117	MC33078			Ra
	IC...13	50.09.0107	RC4559			Ra
	IC...14	50.09.0101	TL072CP			TI
	J.....1	54.14.5520	20-Pole	Jack, Micro-Match		
	J.....2	54.14.5510	10-Pole	Jack, Micro-Match		
	J.....3	54.14.5512	12-Pole	Jack, Micro-Match		
	J.....4	54.14.5520	20-Pole	Jack, Micro-Match		
	J.....5	50.20.2900		Print Socket		
	JP....1	54.11.0128		Jumper		
	JP....2	54.11.0128		Jumper		
	JP....3	54.11.0128		Jumper		
	MP....1	1.775.860.11		MASTER UNIT PCB		
	MP....5	1.775.516.03		U-Profile		
	MP....6	21.38.1352	3 pcs	Screw		
	MP....9	55.15.0412		Push-button assembly, red, 15.2 *15,2		
	MP...10	55.15.0420		Push-button assembly, square		
	MP...11	1.775.860.01		Foil, ON AIR		
	MP...12	50.20.2001	8 pcs	Thermo Clip		
	P.....1	54.01.0020		3 Pin		
	P.....2	54.01.0020		3 Pin		
	P.....3	54.01.0020		3 Pin		
	Q.....1	50.03.0350	J 112	FET		Mot
	Q.....2	50.03.0350	J 112	FET		Mot
	Q.....3	50.03.0350	J 112	FET		Mot
	Q.....4	50.03.0350	J 112	FET		Mot
	Q.....5	50.03.0436	BC 237	NPN		
	Q.....6	50.03.0436	BC 237	NPN		
	Q.....7	50.03.0625	BC 327	PNP		
	Q.....8	50.03.0516	BC 337	NPN matched		
	Q.....9	50.03.0516	BC 337	NPN matched		
	Q....10	50.03.0625	BC 327	PNP matched		
	Q....11	50.03.0625	BC 327	PNP matched		
	Q....12	50.03.0516	BC 337	NPN matched		
	Q....13	50.03.0516	BC 337	NPN matched		
	Q....14	50.03.0625	BC 327	PNP matched		
	Q....15	50.03.0625	BC 327	PNP matched		
	Q....16	50.03.0516	BC 337	NPN matched		
	Q....17	50.03.0516	BC 337	NPN matched		
	Q....18	50.03.0625	BC 327	PNP matched		
	Q....19	50.03.0625	BC 327	PNP matched		
	Q....20	50.03.0516	BC 337	NPN matched		
	Q....21	50.03.0516	BC 337	NPN matched		
	Q....22	50.03.0625	BC 327	PNP matched		
	Q....23	50.03.0625	BC 327	PNP matched		
	Q....24	50.03.0350	J 112	FET		Mot
	Q....25	50.03.0350	J 112	FET		Mot
	Q....26	50.03.0350	J 112	FET		Mot
	Q....27	50.03.0350	J 112	FET		Mot
	Q....28	50.03.0350	J 112	FET		Mot
	Q....29	50.03.0350	J 112	FET		Mot
	Q....30	50.03.0350	J 112	FET		Mot
	R.....1	57.11.3302	3 KOhm	1%, 0.25W, MF		
	R.....2	57.11.3302	3 KOhm	1%, 0.25W, MF		
	R.....3	57.11.3302	3 KOhm	1%, 0.25W, MF		
	R.....4	57.11.3302	3 KOhm	1%, 0.25W, MF		
	R.....5	57.11.3302	3 KOhm	1%, 0.25W, MF		
	R.....6	57.11.3302	3 KOhm	1%, 0.25W, MF		
	R.....7	57.11.3150	15 Ohm	1%, 0.25W, MF		
	R.....8	57.11.3302	3 KOhm	1%, 0.25W, MF		
	R.....9	57.11.3150	15 Ohm	1%, 0.25W, MF		
	R....10	57.11.3302	3 KOhm	1%, 0.25W, MF		
	R....11	57.11.3474	470 KOhm	1%, 0.25W, MF		
	R....12	57.11.3302	3 KOhm	1%, 0.25W, MF		
	R....13	57.11.3474	470 KOhm	1%, 0.25W, MF		
	R....14	57.11.3302	3 KOhm	1%, 0.25W, MF		
	R....15	57.11.3302	3 KOhm	1%, 0.25W, MF		
	R....16	57.11.3302	3 KOhm	1%, 0.25W, MF		
	R....17	57.11.3474	470 KOhm	1%, 0.25W, MF		
	R....18	57.11.3302	3 KOhm	1%, 0.25W, MF		
	R....19	57.11.3302	3 KOhm	1%, 0.25W, MF		
	R....20	57.11.3302	3 KOhm	1%, 0.25W, MF		
	R....21	57.11.3302	3 KOhm	1%, 0.25W, MF		
	R....22	57.11.3474	470 KOhm	1%, 0.25W, MF		
	R....23	57.11.3302	3 KOhm	1%, 0.25W, MF		
	R....24	57.11.3302	3 KOhm	1%, 0.25W, MF		
	R....25	57.11.3302	3 KOhm	1%, 0.25W, MF		
	R....26	57.11.3302	3 KOhm	1%, 0.25W, MF		
	R....27	57.11.3302	3 KOhm	1%, 0.25W, MF		
	R....28	57.11.3302	3 KOhm	1%, 0.25W, MF		
	R....29	57.11.3150	15 Ohm	1%, 0.25W, MF		
	R....30	57.11.3302	3 KOhm	1%, 0.25W, MF		
	R....31	57.11.3150	15 Ohm	1%, 0.25W, MF		
	R....32	57.11.3302	3 KOhm	1%, 0.25W, MF		
	R....33	57.11.3474	470 KOhm	1%, 0.25W, MF		
	R....34	57.11.3302	3 KOhm	1%, 0.25W, MF		
	R....35	57.11.3474	470 KOhm	1%, 0.25W, MF		
	R....36	57.11.3302	3 KOhm	1%, 0.25W, MF		

1.775.860.00 MASTER UNIT (CONT.)

Ad	..Pos..	...Ref.No...	Description		
	R....37	57.11.3302	3 KOhm	1%, 0.25W, MF	
	R....38	57.11.3302	3 KOhm	1%, 0.25W, MF	
	R....39	57.11.3474	470 KOhm	1%, 0.25W, MF	
	R....40	57.11.3302	3 KOhm	1%, 0.25W, MF	
	R....41	57.11.3302	3 KOhm	1%, 0.25W, MF	
	R....42	57.11.3302	3 KOhm	1%, 0.25W, MF	
	R....43	57.11.3302	3 KOhm	1%, 0.25W, MF	
	R....44	57.11.3474	470 KOhm	1%, 0.25W, MF	
	R....45	57.11.3302	3 KOhm	1%, 0.25W, MF	
	R....46	57.11.3302	3 KOhm	1%, 0.25W, MF	
	R....47	57.11.3302	3 KOhm	1%, 0.25W, MF	
	R....48	57.11.3302	3 KOhm	1%, 0.25W, MF	
	R....49	57.11.3302	3 KOhm	1%, 0.25W, MF	
	R....50	57.11.3302	3 KOhm	1%, 0.25W, MF	
	R....51	57.11.3150	15 Ohm	1%, 0.25W, MF	
	R....52	57.11.3302	3 KOhm	1%, 0.25W, MF	
	R....53	57.11.3150	15 Ohm	1%, 0.25W, MF	
	R....54	57.11.3302	3 KOhm	1%, 0.25W, MF	
	R....55	57.11.3474	470 KOhm	1%, 0.25W, MF	
	R....56	57.11.3302	3 KOhm	1%, 0.25W, MF	
	R....57	57.11.3474	470 KOhm	1%, 0.25W, MF	
	R....58	57.11.3302	3 KOhm	1%, 0.25W, MF	
	R....59	57.11.3302	3 KOhm	1%, 0.25W, MF	
	R....60	57.11.3302	3 KOhm	1%, 0.25W, MF	
	R....61	57.11.3474	470 KOhm	1%, 0.25W, MF	
	R....62	57.11.3302	3 KOhm	1%, 0.25W, MF	
	R....63	57.11.3302	3 KOhm	1%, 0.25W, MF	
	R....64	57.11.3302	3 KOhm	1%, 0.25W, MF	
	R....65	57.11.3302	3 KOhm	1%, 0.25W, MF	
	R....66	57.11.3474	470 KOhm	1%, 0.25W, MF	
	R....67	57.11.3242	2.4 KOhm	1%, 0.25W, MF	
	R....68	57.11.3242	2.4 KOhm	1%, 0.25W, MF	
	R....69	57.11.5106	10 MOhm	5%, 0.25W, MF	
	R....70	57.11.5106	10 MOhm	5%, 0.25W, MF	
	R....71	57.11.3104	100 KOhm	1%, 0.25W, MF	
	R....72	57.11.5106	10 MOhm	5%, 0.25W, MF	
	R....73	57.11.3104	100 KOhm	1%, 0.25W, MF	
	R....74	57.11.3103	10 KOhm	1%, 0.25W, MF	
	R....75	57.11.5106	10 MOhm	5%, 0.25W, MF	
	R....76	57.11.3104	100 KOhm	1%, 0.25W, MF	
	R....77	57.11.3103	10 KOhm	1%, 0.25W, MF	
	R....78	57.11.3103	10 KOhm	1%, 0.25W, MF	
	R....79	57.11.3472	4.7 KOhm	1%, 0.25W, MF	
	R....80	57.11.3000	0 Ohm	1%, 0.25W, MF	
	R....81	57.11.3000	0 Ohm	1%, 0.25W, MF	
	R....82	57.11.3103	10 KOhm	1%, 0.25W, MF	
	R....83	57.11.3103	10 KOhm	1%, 0.25W, MF	
	R....84	57.11.3103	10 KOhm	1%, 0.25W, MF	
	R....85	57.11.3339	3.3 Ohm	1%, 0.25W, MF	
	R....86	57.11.3339	3.3 Ohm	1%, 0.25W, MF	
	R....87	57.11.3103	10 KOhm	1%, 0.25W, MF	
	R....88	57.11.3103	10 KOhm	1%, 0.25W, MF	
	R....89	57.11.3339	3.3 Ohm	1%, 0.25W, MF	
	R....90	57.11.3339	3.3 Ohm	1%, 0.25W, MF	
	R....91	57.11.3332	3.3 KOhm	1%, 0.25W, MF	
	R....92	57.11.3332	3.3 KOhm	1%, 0.25W, MF	
	R....93	57.11.3223	22 KOhm	1%, 0.25W, MF	
	R....94	57.11.3102	1 KOhm	1%, 0.25W, MF	
	R....95	57.11.3821	820 Ohm	1%, 0.25W, MF	
	R....96	57.19.0330	33 Ohm	5%, 0.33W, Fusible Resistor II	
	R....97	57.19.0330	33 Ohm	5%, 0.33W, Fusible Resistor II	
	R....98	57.11.3103	10 KOhm	1%, 0.25W, MF	
	R....99	57.11.3103	10 KOhm	1%, 0.25W, MF	
	R...100	57.11.3103	10 KOhm	1%, 0.25W, MF	
	R...101	57.11.3339	3.3 Ohm	1%, 0.25W, MF	
	R...102	57.11.3339	3.3 Ohm	1%, 0.25W, MF	
	R...103	57.11.3103	10 KOhm	1%, 0.25W, MF	
	R...104	57.11.3103	10 KOhm	1%, 0.25W, MF	
	R...105	57.11.3339	3.3 Ohm	1%, 0.25W, MF	
	R...106	57.11.3339	3.3 Ohm	1%, 0.25W, MF	
	R...107	57.11.3332	3.3 KOhm	1%, 0.25W, MF	
	R...108	57.11.3332	3.3 KOhm	1%, 0.25W, MF	
	R...109	57.11.3223	22 KOhm	1%, 0.25W, MF	
	R...110	57.11.3102	1 KOhm	1%, 0.25W, MF	
	R...111	57.11.3821	820 Ohm	1%, 0.25W, MF	
	R...112	57.19.0330	33 Ohm	5%, 0.33W, Fusible Resistor II	
	R...113	57.19.0330	33 Ohm	5%, 0.33W, Fusible Resistor II	
	R...114	57.11.3133	13 KOhm	1%, 0.25W, MF	
	R...115	57.11.3133	13 KOhm	1%, 0.25W, MF	
	R...116	57.11.3223	22 KOhm	1%, 0.25W, MF	
	R...117	57.11.3133	13 KOhm	1%, 0.25W, MF	
	R...118	57.11.5106	10 MOhm	5%, 0.25W, MF	
	R...119	57.11.5106	10 MOhm	5%, 0.25W, MF	
	R...120	57.11.3133	13 KOhm	1%, 0.25W, MF	
	R...121	57.11.3133	13 KOhm	1%, 0.25W, MF	
	R...122	57.11.3223	22 KOhm	1%, 0.25W, MF	
	R...123	57.11.3133	13 KOhm	1%, 0.25W, MF	
	R...124	57.11.5106	10 MOhm	5%, 0.25W, MF	
	R...125	57.11.5106	10 MOhm	5%, 0.25W, MF	
	R...126	57.11.3104	100 KOhm	1%, 0.25W, MF	
	R...127	57.11.3104	100 KOhm	1%, 0.25W, MF	
	R...128	57.11.3104	100 KOhm	1%, 0.25W, MF	
	R...129	57.11.3223	22 KOhm	1%, 0.25W, MF	
	R...130	57.11.3103	10 KOhm	1%, 0.25W, MF	
	R...131	57.11.3123	12 KOhm	1%, 0.25W, MF	
	R...132	57.11.3474	470 KOhm	1%, 0.25W, MF	
	R...133	57.11.3123	12 KOhm	1%, 0.25W, MF	
	R...134	57.11.3474	470 KOhm	1%, 0.25W, MF	
	R...135	57.11.5106	10 MOhm	5%, 0.25W, MF	
	R...136	57.11.5106	10 MOhm	5%, 0.25W, MF	
	R...137	57.11.3103	10 KOhm	1%, 0.25W, MF	
	R...138	57.11.3510	51 Ohm	1%, 0.25W, MF	
	R...139	57.11.3392	3.9 KOhm	1%, 0.25W, MF	
	R...140	57.11.3104	100 KOhm	1%, 0.25W, MF	
	R...141	57.11.3103	10 KOhm	1%, 0.25W, MF	
	R...142	57.11.3510	51 Ohm	1%, 0.25W, MF	
	R...143	57.11.3392	3.9 KOhm	1%, 0.25W, MF	
	R...144	57.11.3104	100 KOhm	1%, 0.25W, MF	
	R...145	57.11.3133	13 KOhm	1%, 0.25W, MF	
	R...146	57.11.3133	13 KOhm	1%, 0.25W, MF	
	R...147	57.11.3104	100 KOhm	1%, 0.25W, MF	
	R...148	57.11.3104	100 KOhm	1%, 0.25W, MF	
	R...149	57.11.3272	2.7 KOhm	1%, 0.25W, MF	
	R...150	57.11.3272	2.7 KOhm	1%, 0.25W, MF	
	R...151	57.11.3821	820 Ohm	1%, 0.25W, MF	
	R...152	57.11.3821	820 Ohm	1%, 0.25W, MF	
	R...153	57.11.3183	18 KOhm	1%, 0.25W, MF	
	R...154	57.11.3471	470 Ohm	1%, 0.25W, MF	
	R...155	57.11.3333	33 KOhm	1%, 0.25W, MF	
	R...156	57.11.3101	100 Ohm	1%, 0.25W, MF	
	R...157	57.11.3101	100 Ohm	1%, 0.25W, MF	
	R...158	57.11.3101	100 Ohm	1%, 0.25W, MF	
	R...159	57.11.3223	22 KOhm	1%, 0.25W, MF	
	R...160	57.11.3104	100 KOhm	1%, 0.25W, MF	
	R...161	57.11.5106	10 MOhm	5%, 0.25W, MF	
	R...162	57.11.3513	51 KOhm	1%, 0.25W, MF	
	R...163	57.11.3162	1.6 KOhm	1%, 0.25W, MF	
	R...164	57.11.3271	270 Ohm	1%, 0.25W, MF	
	R...165	57.11.5106	10 MOhm	5%, 0.25W, MF	
	R...166	57.11.3101	100 Ohm	1%, 0.25W, MF	
	R...167	57.11.3101	100 Ohm	1%, 0.25W, MF	
	R...168	57.11.3103	10 KOhm	1%, 0.25W, MF	
	R...169	57.11.3103	10 KOhm	1%, 0.25W, MF	
	RA....1	57.92.7012	PTC	300 mA	
01	RA....1	. .		Not Used	
	RA....2	57.92.7012	PTC	300 mA	
	RA....3	57.92.7012	PTC	300 mA	
	RA....4	57.92.7012	PTC	300 mA	
	RA....5	57.92.7012	PTC	300 mA	
	RA....6	57.92.7012	PTC	300 mA	
	RA....7	57.92.7012	PTC	300 mA	
	RA....8	1.775.340.01	1* 10KOhm	log.	
	RA....9	58.01.9503	50 KOhm	10%, 0.50W, C	
	RA...10	58.01.9503	50 KOhm	10%, 0.50W, C	
	RA...11	1.775.430.03	2* 10KOhm	lin.	
	RA...12	58.01.9201	200 Ohm	10%, 0.50W, C	
	RA...13	58.01.9201	200 Ohm	10%, 0.50W, C	
	RA...14	1.775.330.07	1* 10KOhm	lin.Fader	
	RA...15	58.01.9501	500 Ohm	10%, 0.50W, C	
	S.....1	55.15.0401		Switch 1u,rastend 18 * 18	
	T.....1	1.022.362.00		Output-Transformator 1:1,45	ST
	T.....2	1.022.362.00		Output-Transformator 1:1,45	ST
	TP....1	54.33.6010		Fast Connector 2,8mm AMP	
	TP....2	54.33.6010		Fast Connector 2,8mm AMP	

00 KG 91/08/30
01 UL 91/11/04

EL=Electrolytic, C=Ceramic, PETP=Polyester

MF=Metal Film

MANUFACTURER: dbx=dbx Incorparated,Mot=Motorola,NS=National Semiconductor
Ra=Raytheon,Sig=Signetics,TI=Texas Instruments

END

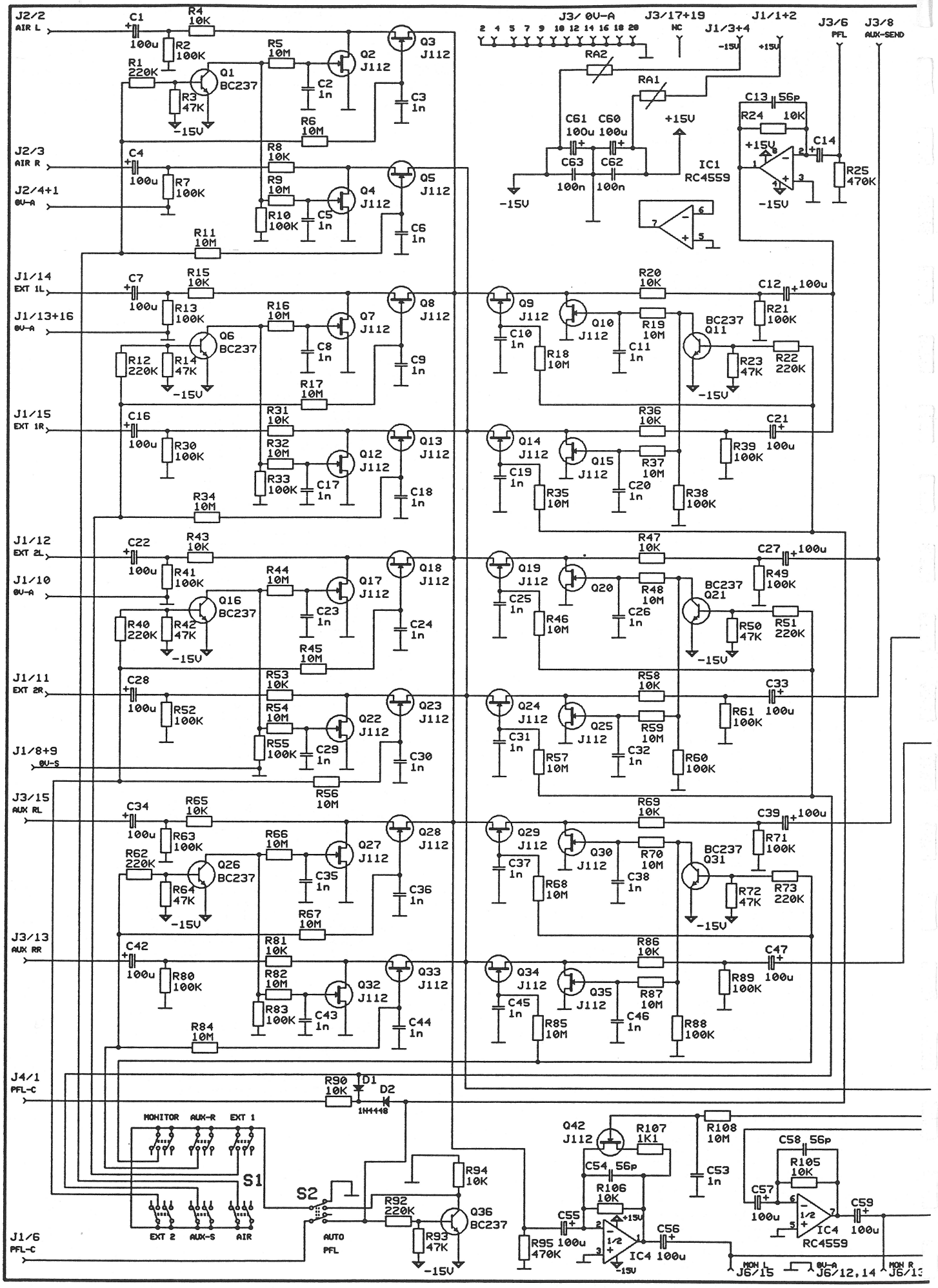
J2/2
AIR L
J2/3
AIR R
J2/4+1
0V-A
J1/14
EXT 1L
J1/13+16
0V-A
J1/15
EXT 1R
J1/12
EXT 2L
J1/10
0V-A
J1/11
EXT 2R
J1/8+9
0V-S
J3/15
AUX RL
J3/13
AUX RR
J4/1
PFL-C
J1/6
PFL-C
J3/ 0V-A
J3/17+19
J1/1+2
J1/3+4
J3/6
PFL
J3/8
AUX-SEND
NC
-15V
+15V
IC1
RC4559
IC4
RC4559
MONITOR
AUX-R
EXT 1
EXT 2
AUX-S
AIR
S1
S2
AUTO
PFL
1N4148
MON L
J6/15
0V-A
J6/12,14
MON R
J6/13

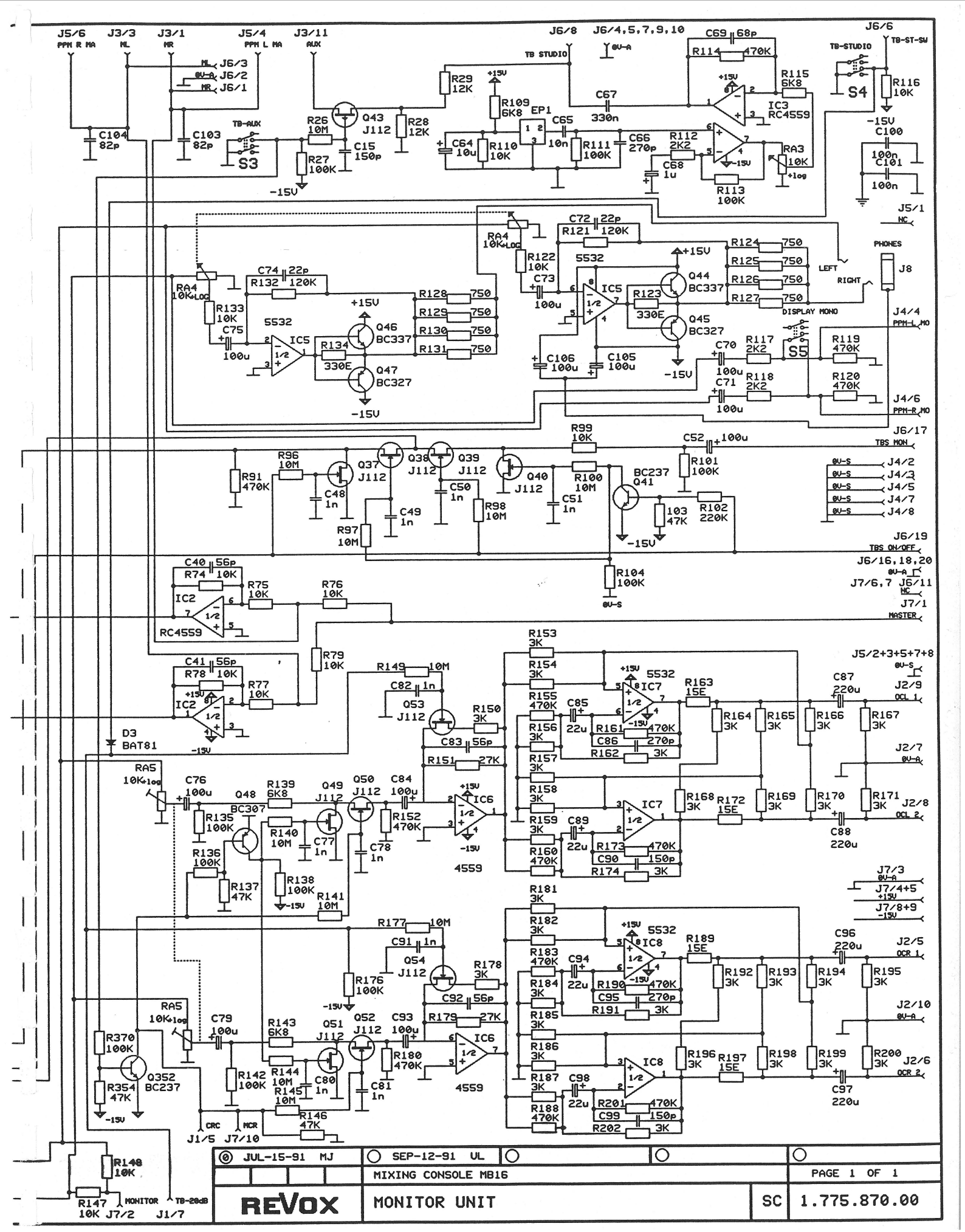
J5/6 PPM R MA
J3/3 ML
J3/1 MR
J5/4 PPM L MA
J3/11 AUX
J6/8
J6/4,5,7,9,10
J6/6
TB STUDIO
TB-STUDIO
TB-ST-SW
S4
S3
TB-AUX
IC3 RC4559
IC5 5532
IC2 RC4559
IC6 4559
IC7 5532
IC8 5532
Q43 J112
Q44 BC337
Q45 BC327
Q46 BC337
Q47 BC327
Q37 J112
Q38 J112
Q39 J112
Q40 J112
Q41 BC237
Q48 BC307
Q49 J112
Q50 J112
Q51 J112
Q52 J112
Q53 J112
Q54 J112
Q352 BC237
D3 BAT81
J8 PHONES
S5 DISPLAY MONO
J4/4 PPM-L MO
J4/6 PPM-R MO
J6/17 TBS MON
J6/19 TBS ON-OFF
J6/16,18,20
J7/6,7 J6/11
J7/1 MASTER
J5/2+3+5+7+8
J2/9 OCL 1
J2/8 OCL 2
J2/5 OCR 1
J2/6 OCR 2
J7/3
J7/4+5
J7/8+9
J1/5 CRC
J7/10 MCR
J7/2 MONITOR
J1/7 TB-20dB
JUL-15-91 MJ
SEP-12-91 UL
MIXING CONSOLE MB16
PAGE 1 OF 1
REVOX
MONITOR UNIT
SC
1.775.870.00

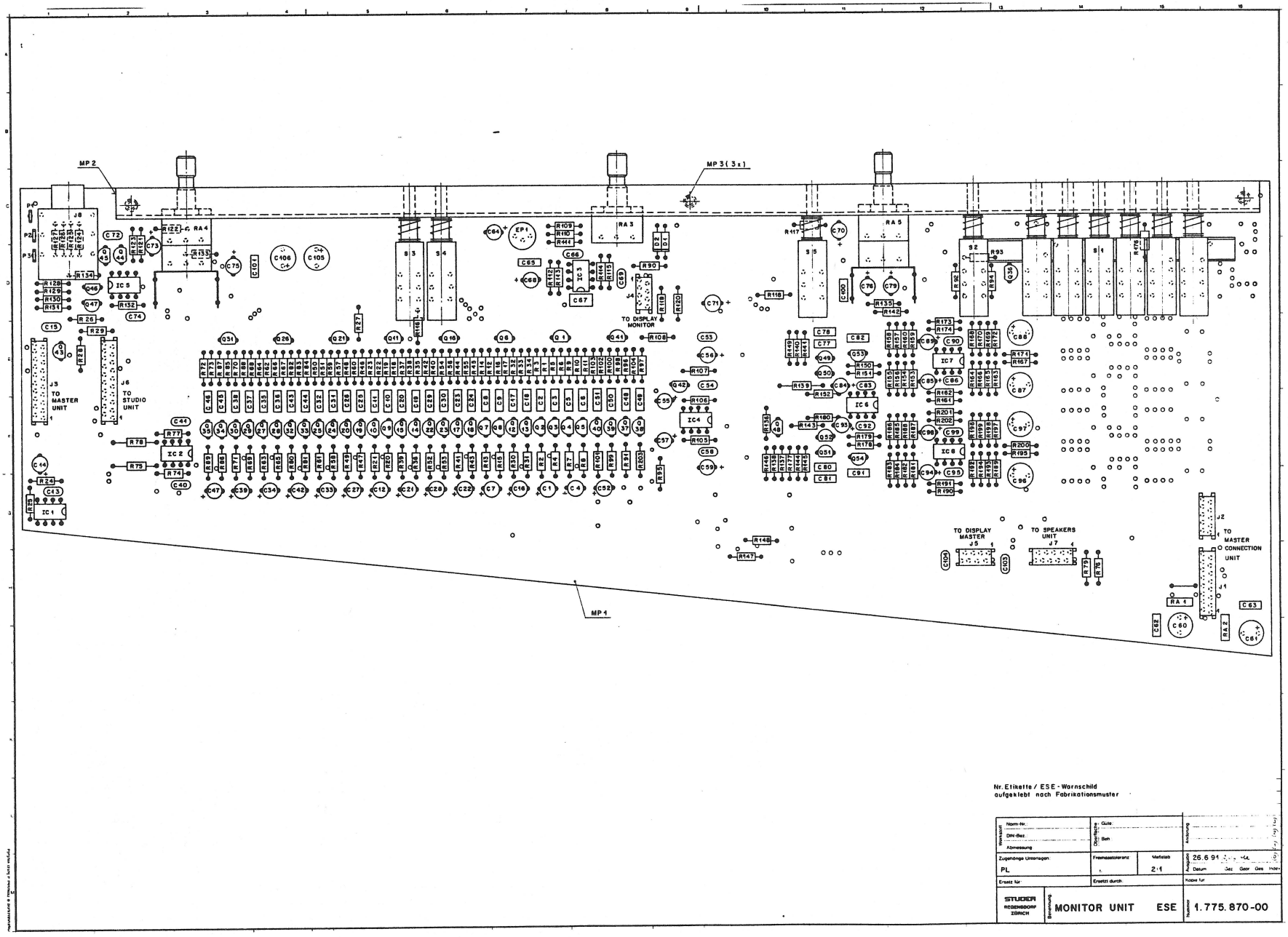

Nr. Etikette / ESE - Warnschild aufgeklebt nach Fabrikationsmuster

Norm-Nr.	Oberfläche: Gute		Änderung
DIN-Bez.	Beh.		
Abmessung			
Zugehörige Unterlagen:	Freimaßtoleranz	Maßstab	Ausgabe 26.6.91
PL		2:1	Datum Jez Geor Ges Index
Ersatz für:	Ersetzt durch:		Kopie für:

STUDER REGENSDORF ZÜRICH

Benennung: MONITOR UNIT ESE

Nummer: 1.775.870-00

1.775.870.00 MONITOR UNIT

Ad	..Pos..	...Ref.No...	Description			
	C.....1	59.22.3101	100 uF	-20%, 10V,	EL	
	C.....2	59.06.0102	1 nF	10%, 25V,	PETP	
	C.....3	59.06.0102	1 nF	10%, 25V,	PETP	
	C.....4	59.22.3101	100 uF	-20%, 10V,	EL	
	C.....5	59.06.0102	1 nF	10%, 25V,	PETP	
	C.....6	59.06.0102	1 nF	10%, 25V,	PETP	
	C.....7	59.22.3101	100 uF	-20%, 10V,	EL	
	C.....8	59.06.0102	1 nF	10%, 25V,	PETP	
	C.....9	59.06.0102	1 nF	10%, 25V,	PETP	
	C....10	59.06.0102	1 nF	10%, 25V,	PETP	
	C....11	59.06.0102	1 nF	10%, 25V,	PETP	
	C....12	59.22.3101	100 uF	-20%, 10V,	EL	
	C....13	59.34.4560	56 pF	5%, 25V,	C	
	C....14	59.22.3101	100 uF	-20%, 10V,	EL	
	C....15	59.34.4151	150 pF	5%, 25V,	C	
	C....16	59.22.3101	100 uF	-20%, 10V,	EL	
	C....17	59.06.0102	1 nF	10%, 25V,	PETP	
	C....18	59.06.0102	1 nF	10%, 25V,	PETP	
	C....19	59.06.0102	1 nF	10%, 25V,	PETP	
	C....20	59.06.0102	1 nF	10%, 25V,	PETP	
	C....21	59.22.3101	100 uF	-20%, 10V,	EL	
	C....22	59.22.3101	100 uF	-20%, 10V,	EL	
	C....23	59.06.0102	1 nF	10%, 25V,	PETP	
	C....24	59.06.0102	1 nF	10%, 25V,	PETP	
	C....25	59.06.0102	1 nF	10%, 25V,	PETP	
	C....26	59.06.0102	1 nF	10%, 25V,	PETP	
	C....27	59.22.3101	100 uF	-20%, 10V,	EL	
	C....28	59.22.3101	100 uF	-20%, 10V,	EL	
	C....29	59.06.0102	1 nF	10%, 25V,	PETP	
	C....30	59.06.0102	1 nF	10%, 25V,	PETP	
	C....31	59.06.0102	1 nF	10%, 25V,	PETP	
	C....32	59.06.0102	1 nF	10%, 25V,	PETP	
	C....33	59.22.3101	100 uF	-20%, 10V,	EL	
	C....34	59.22.3101	100 uF	-20%, 10V,	EL	
	C....35	59.06.0102	1 nF	10%, 25V,	PETP	
	C....36	59.06.0102	1 nF	10%, 25V,	PETP	
	C....37	59.06.0102	1 nF	10%, 25V,	PETP	
	C....38	59.06.0102	1 nF	10%, 25V,	PETP	
	C....39	59.22.3101	100 uF	-20%, 10V,	EL	
	C....40	59.34.4560	56 pF	5%, 25V,	C	
	C....41	59.34.4560	56 pF	5%, 25V,	C	
	C....42	59.22.3101	100 uF	-20%, 10V,	EL	
	C....43	59.06.0102	1 nF	10%, 25V,	PETP	
	C....44	59.06.0102	1 nF	10%, 25V,	PETP	
	C....45	59.06.0102	1 nF	10%, 25V,	PETP	
	C....46	59.06.0102	1 nF	10%, 25V,	PETP	
	C....47	59.22.3101	100 uF	-20%, 10V,	EL	
	C....48	59.06.0102	1 nF	10%, 25V,	PETP	
	C....49	59.06.0102	1 nF	10%, 25V,	PETP	
	C....50	59.06.0102	1 nF	10%, 25V,	PETP	
	C....51	59.06.0102	1 nF	10%, 25V,	PETP	
	C....52	59.22.3101	100 uF	-20%, 10V,	EL	
	C....53	59.06.0102	1 nF	10%, 25V,	PETP	
	C....54	59.34.4560	56 pF	5%, 25V,	C	
	C....55	59.22.3101	100 uF	-20%, 10V,	EL	
	C....56	59.22.3101	100 uF	-20%, 10V,	EL	
	C....57	59.22.3101	100 uF	-20%, 10V,	EL	
	C....58	59.34.4560	56 pF	5%, 25V,	C	
	C....59	59.22.3101	100 uF	-20%, 10V,	EL	
	C....60	59.22.5101	100 uF	-20V, 25V,	EL	
	C....61	59.22.5101	100 uF	-20V, 25V,	EL	
	C....62	59.06.0104	100 nF	10%, 25V,	PETP	
	C....63	59.06.0104	100 nF	10%, 25V,	PETP	
	C....64	59.22.6100	10 uF	-20%, 25V,	EL	
	C....65	59.06.0103	10 nF	10%, 25V,	PETP	
	C....66	59.34.4271	270 pF	5%, 25V,	C	
	C....67	59.06.0334	330 nF	10%, 25V,	PETP	
	C....68	59.22.8109	1 uF	-20%, 63V,	EL	
	C....69	59.34.4680	68 pF	10%, 25V,	C	
	C....70	59.22.3101	100 uF	-20%, 10V,	EL	
	C....71	59.22.3101	100 uF	-20%, 10V,	EL	
	C....72	59.34.2220	22 pF	10%, 25V,	C	
	C....73	59.22.3101	100 uF	-20%, 10V,	EL	
	C....74	59.34.2220	22 pF	10%, 25V,	C	
	C....75	59.22.3101	100 uF	-20%, 10V,	EL	
	C....76	59.22.3101	100 uF	-20%, 10V,	EL	
	C....77	59.06.0102	1 nF	10%, 25V,	PETP	
	C....78	59.06.0102	1 nF	10%, 25V,	PETP	
	C....79	59.22.3101	100 uF	-20%, 10V,	EL	
	C....80	59.06.0102	1 nF	10%, 25V,	PETP	
	C....81	59.06.0102	1 nF	10%, 25V,	PETP	
	C....82	59.06.0102	1 nF	10%, 25V,	PETP	
	C....83	59.34.4560	56 pF	5%, 25V,	C	
	C....84	59.22.3101	100 uF	-20%, 10V,	EL	
	C....85	59.22.5220	22 uF	-20%, 10V,	EL	
	C....86	59.34.4271	270 pF	5%, 25V,	C	
	C....87	59.22.3221	220 uF	-20%, 10V,	EL	
	C....88	59.22.3221	220 uF	-20%, 10V,	EL	
	C....89	59.22.5220	22 uF	-20%, 10V,	EL	
	C....90	59.34.4151	150 pF	5%, 25V,	C	
	C....91	59.06.0102	1 nF	10%, 25V,	PETP	
	C....92	59.34.4560	56 pF	5%, 25V,	C	
	C....93	59.22.3101	100 uF	-20%, 10V,	EL	
	C....94	59.22.5220	22 uF	-20%, 10V,	EL	
	C....95	59.34.4271	270 pF	5%, 25V,	C	
	C....96	59.22.3221	220 uF	-20%, 10V,	EL	
	C....97	59.22.3221	220 uF	-20%, 10V,	EL	
	C....98	59.22.5220	22 uF	-20%, 10V,	EL	
	C....99	59.34.4151	150 pF	5%, 25V,	C	
	C...100	59.06.0104	100 nF	10%, 25V,	PETP	
	C...101	59.06.0104	100 nF	10%, 25V,	PETP	
	C...103	59.34.4820	82 pF	5%, 25V,	C	
	C...104	59.34.4820	82 pF	5%, 25V,	C	
	C...105	59.22.5101	100 uF	-20%, 25V,	EL	
	C...106	59.22.5101	100 uF	-20%, 25V,	EL	
	D.....1	50.04.0125	1N 4448			
	D.....2	50.04.0125	1N 4448			
01	D.....3	50.04.0523	BAT 81			
	EP....1	89.01.0343	Electret	Microphone EM60		
01	EP....1	89.01.3450	Electret	Microphone EM80 B7L		
	IC....1	50.09.0107	RC4559			Ra
	IC....2	50.09.0107	RC4559			Ra
	IC....3	50.09.0107	RC4559			Ra
	IC....4	50.09.0107	RC4559			Ra
	IC....5	50.09.0106	5532AN			NS
	IC....6	50.09.0107	RC4559			Ra
	IC....7	50.09.0106	5532AN			NS
	IC....8	50.09.0106	5532AN			NS
	J.....1	54.14.5516	16-Pole	Jack	Micro Match	
	J.....2	54.14.5510	10-Pole	Jack	Micro Match	
	J.....3	54.14.5520	20-Pole	Jack	Micro Match	
	J.....4	54.14.5508	8-Pole	Jack	Micro Match	
	J.....5	54.14.5508	8-Pole	Jack	Micro Match	
	J.....6	54.14.5520	20-Pole	Jack	Micro Match	
	J.....7	54.14.5510	10-Pole	Jack	Micro Match	
	J.....8	1.710.350.02	Stereo	Jack Socket		
	MP....1	1.775.870.11		MONITOR UNIT PCB		
01	MP....1	1.775.870.12		MONITOR UNIT PCB		
	MP....2	1.775.518.02		U-Profil Mic		
	MP....3	21.38.1352	3 pcs	Screw		
	P.....1	54.02.0320		Flatpin 2.8*0.8		
	P.....2	54.02.0320		Flatpin 2.8*0.8		
	P.....3	54.02.0320		Flatpin 2.8*0.8		
	Q.....1	50.03.0436	BC237	NPN		
	Q.....2	50.03.0350	J 112	FET		Mot
	Q.....3	50.03.0350	J 112	FET		Mot
	Q.....4	50.03.0350	J 112	FET		Mot
	Q.....5	50.03.0350	J 112	FET		Mot
	Q.....6	50.03.0436	BC237	NPN		
	Q.....7	50.03.0350	J 112	FET		Mot
	Q.....8	50.03.0350	J 112	FET		Mot
	Q.....9	50.03.0350	J 112	FET		Mot
	Q....10	50.03.0350	J 112	FET		Mot
	Q....11	50.03.0436	BC237	NPN		
	Q....12	50.03.0350	J 112	FET		Mot
	Q....13	50.03.0350	J 112	FET		Mot
	Q....14	50.03.0350	J 112	FET		Mot
	Q....15	50.03.0350	J 112	FET		Mot
	Q....16	50.03.0436	BC237	NPN		
	Q....17	50.03.0350	J 112	FET		Mot
	Q....18	50.03.0350	J 112	FET		Mot
	Q....19	50.03.0350	J 112	FET		Mot
	Q....20	50.03.0350	J 112	FET		Mot
	Q....21	50.03.0436	BC237	NPN		
	Q....22	50.03.0350	J 112	FET		Mot
	Q....23	50.03.0350	J 112	FET		Mot
	Q....24	50.03.0350	J 112	FET		Mot
	Q....25	50.03.0350	J 112	FET		Mot
	Q....26	50.03.0436	BC237	NPN		
	Q....27	50.03.0350	J 112	FET		Mot
	Q....28	50.03.0350	J 112	FET		Mot
	Q....29	50.03.0350	J 112	FET		Mot
	Q....30	50.03.0350	J 112	FET		Mot
	Q....31	50.03.0436	BC237	NPN		
	Q....32	50.03.0350	J 112	FET		Mot
	Q....33	50.03.0350	J 112	FET		Mot
	Q....34	50.03.0350	J 112	FET		Mot
	Q....35	50.03.0350	J 112	FET		Mot
	Q....36	50.03.0436	BC237	NPN		
	Q....37	50.03.0350	J 112	FET		Mot
	Q....38	50.03.0350	J 112	FET		Mot
	Q....39	50.03.0350	J 112	FET		Mot
	Q....40	50.03.0350	J 112	FET		Mot
	Q....41	50.03.0436	BC237	NPN		
	Q....42	50.03.0350	J 112	FET		Mot
	Q....43	50.03.0350	J 112	FET		Mot
	Q....44	50.03.0516	BC337	NPN match		
	Q....45	50.03.0351	BC327	PNP match		
	Q....46	50.03.0516	BC337	NPN match		
	Q....47	50.03.0351	BC327	PNP match		
	Q....48	50.03.0515	BC307	PNP		
	Q....49	50.03.0350	J 112	FET		Mot
	Q....50	50.03.0350	J 112	FET		Mot
	Q....51	50.03.0350	J 112	FET		Mot
	Q....52	50.03.0350	J 112	FET		Mot
	Q....53	50.03.0350	J 112	FET		Mot

1.775.870.00 MONITOR UNIT (CONT.)

Ad	..Pos..	...Ref.No...	Description		
	Q....54	50.03.0350	J 112	FET	Not
01	Q...352	50.03.0436	BC237	NPN	
	R.....1	57.11.3224	220 KOhm	1%, 0.25W, MF	
	R.....2	57.11.3104	100 KOhm	1%, 0.25W, MF	
	R.....3	57.11.3473	47 KOhm	1%, 0.25W, MF	
	R.....4	57.11.3103	10 KOhm	1%, 0.25W, MF	
	R.....5	57.11.5106	10 MOhm	5%, 0.25W, MF	
	R.....6	57.11.5106	10 MOhm	5%, 0.25W, MF	
	R.....7	57.11.3104	100 KOhm	1%, 0.25W, MF	
	R.....8	57.11.3103	10 KOhm	1%, 0.25W, MF	
	R.....9	57.11.5106	10 MOhm	5%, 0.25W, MF	
	R....10	57.11.3104	100 KOhm	1%, 0.25W, MF	
	R....11	57.11.5106	10 MOhm	5%, 0.25W, MF	
	R....12	57.11.3224	220 KOhm	1%, 0.25W, MF	
	R....13	57.11.3104	100 KOhm	1%, 0.25W, MF	
	R....14	57.11.3473	47 KOhm	1%, 0.25W, MF	
	R....15	57.11.3103	10 KOhm	1%, 0.25W, MF	
	R....16	57.11.5106	10 MOhm	5%, 0.25W, MF	
	R....17	57.11.5106	10 MOhm	5%, 0.25W, MF	
	R....18	57.11.5106	10 MOhm	5%, 0.25W, MF	
	R....19	57.11.5106	10 MOhm	5%, 0.25W, MF	
	R....20	57.11.3103	10 KOhm	1%, 0.25W, MF	
	R....21	57.11.3104	100 KOhm	1%, 0.25W, MF	
	R....22	57.11.3224	220 KOhm	1%, 0.25W, MF	
	R....23	57.11.3473	47 KOhm	1%, 0.25W, MF	
	R....24	57.11.3103	10 KOhm	1%, 0.25W, MF	
	R....25	57.11.3474	470 KOhm	1%, 0.25W, MF	
	R....26	57.11.5106	10 MOhm	5%, 0.25W, MF	
	R....27	57.11.3104	100 KOhm	1%, 0.25W, MF	
	R....28	57.11.3123	12 KOhm	1%, 0.25W, MF	
	R....29	57.11.3123	12 KOhm	1%, 0.25W, MF	
	R....30	57.11.3104	100 KOhm	1%, 0.25W, MF	
	R....31	57.11.3103	10 KOhm	1%, 0.25W, MF	
	R....32	57.11.5106	10 MOhm	5%, 0.25W, MF	
	R....33	57.11.3104	100 KOhm	1%, 0.25W, MF	
	R....34	57.11.5106	10 MOhm	5%, 0.25W, MF	
	R....35	57.11.5106	10 MOhm	5%, 0.25W, MF	
	R....36	57.11.3103	10 KOhm	1%, 0.25W, MF	
	R....37	57.11.5106	10 MOhm	5%, 0.25W, MF	
	R....38	57.11.3104	100 KOhm	1%, 0.25W, MF	
	R....39	57.11.3104	100 KOhm	1%, 0.25W, MF	
	R....40	57.11.3224	220 KOhm	1%, 0.25W, MF	
	R....41	57.11.3104	100 KOhm	1%, 0.25W, MF	
	R....42	57.11.3473	47 KOhm	1%, 0.25W, MF	
	R....43	57.11.3103	10 KOhm	1%, 0.25W, MF	
	R....44	57.11.5106	10 MOhm	5%, 0.25W, MF	
	R....45	57.11.5106	10 MOhm	5%, 0.25W, MF	
	R....46	57.11.5106	10 MOhm	5%, 0.25W, MF	
	R....47	57.11.3103	10 KOhm	1%, 0.25W, MF	
	R....48	57.11.5106	10 MOhm	5%, 0.25W, MF	
	R....49	57.11.3104	100 KOhm	1%, 0.25W, MF	
	R....50	57.11.3473	47 KOhm	1%, 0.25W, MF	
	R....51	57.11.3224	220 KOhm	1%, 0.25W, MF	
	R....52	57.11.3104	100 KOhm	1%, 0.25W, MF	
	R....53	57.11.3103	10 KOhm	1%, 0.25W, MF	
	R....54	57.11.5106	10 MOhm	5%, 0.25W, MF	
	R....55	57.11.3104	100 KOhm	1%, 0.25W, MF	
	R....56	57.11.5106	10 MOhm	5%, 0.25W, MF	
	R....57	57.11.5106	10 MOhm	5%, 0.25W, MF	
	R....58	57.11.3103	10 KOhm	1%, 0.25W, MF	
	R....59	57.11.5106	10 MOhm	5%, 0.25W, MF	
	R....60	57.11.3104	100 KOhm	1%, 0.25W, MF	
	R....61	57.11.3104	100 KOhm	1%, 0.25W, MF	
	R....62	57.11.3224	220 KOhm	1%, 0.25W, MF	
	R....63	57.11.3104	100 KOhm	1%, 0.25W, MF	
	R....64	57.11.3473	47 KOhm	1%, 0.25W, MF	
	R....65	57.11.3103	10 KOhm	1%, 0.25W, MF	
	R....66	57.11.5106	10 MOhm	5%, 0.25W, MF	
	R....67	57.11.5106	10 MOhm	5%, 0.25W, MF	
	R....68	57.11.5106	10 MOhm	5%, 0.25W, MF	
	R....69	57.11.3103	10 KOhm	1%, 0.25W, MF	
	R....70	57.11.5106	10 MOhm	5%, 0.25W, MF	
	R....71	57.11.3104	100 KOhm	1%, 0.25W, MF	
	R....72	57.11.3473	47 KOhm	1%, 0.25W, MF	
	R....73	57.11.3224	220 KOhm	1%, 0.25W, MF	
	R....74	57.11.3103	10 KOhm	1%, 0.25W, MF	
	R....75	57.11.3103	10 KOhm	1%, 0.25W, MF	
	R....76	57.11.3103	10 KOhm	1%, 0.25W, MF	
	R....77	57.11.3103	10 KOhm	1%, 0.25W, MF	
	R....78	57.11.3103	10 KOhm	1%, 0.25W, MF	
	R....79	57.11.3103	10 KOhm	1%, 0.25W, MF	
	R....80	57.11.3104	100 KOhm	1%, 0.25W, MF	
	R....81	57.11.3103	10 KOhm	1%, 0.25W, MF	
	R....82	57.11.5106	10 MOhm	5%, 0.25W, MF	
	R....83	57.11.3104	100 KOhm	1%, 0.25W, MF	
	R....84	57.11.5106	10 MOhm	5%, 0.25W, MF	
	R....85	57.11.5106	10 MOhm	5%, 0.25W, MF	
	R....86	57.11.3103	10 KOhm	1%, 0.25W, MF	
	R....87	57.11.5106	10 MOhm	5%, 0.25W, MF	
	R....88	57.11.3104	100 KOhm	1%, 0.25W, MF	
	R....89	57.11.3104	100 KOhm	1%, 0.25W, MF	
	R....90	57.11.3103	10 KOhm	1%, 0.25W, MF	
	R....91	57.11.3474	470 KOhm	1%, 0.25W, MF	
	R....92	57.11.3224	220 KOhm	1%, 0.25W, MF	
	R....93	57.11.3473	47 KOhm	1%, 0.25W, MF	
	R....94	57.11.3103	10 KOhm	1%, 0.25W, MF	
	R....95	57.11.3474	470 KOhm	1%, 0.25W, MF	
	R....96	57.11.5106	10 MOhm	5%, 0.25W, MF	
	R....97	57.11.5106	10 MOhm	5%, 0.25W, MF	
	R....98	57.11.5106	10 MOhm	5%, 0.25W, MF	
	R....99	57.11.3103	10 KOhm	1%, 0.25W, MF	
	R...100	57.11.5106	10 MOhm	5%, 0.25W, MF	
	R...101	57.11.3104	100 KOhm	1%, 0.25W, MF	
	R...102	57.11.3224	220 KOhm	1%, 0.25W, MF	
	R...103	57.11.3473	47 KOhm	1%, 0.25W, MF	
	R...104	57.11.3104	100 KOhm	1%, 0.25W, MF	
	R...105	57.11.3103	10 KOhm	1%, 0.25W, MF	
	R...106	57.11.3103	10 KOhm	1%, 0.25W, MF	
	R...107	57.11.3112	1.1 KOhm	1%, 0.25W, MF	
	R...108	57.11.5106	10 MOhm	5%, 0.25W, MF	
	R...109	57.11.3682	6.8 KOhm	1%, 0.25W, MF	
01	R...109	57.11.3222	2.2 KOhm	1%, 0.25W, MF	
	R...110	57.11.3103	10 KOhm	1%, 0.25W, MF	
01	R...110	57.11.3332	3.3 KOhm	1%, 0.25W, MF	
	R...111	57.11.3104	100 KOhm	1%, 0.25W, MF	
	R...112	57.11.3222	2.2 KOhm	1%, 0.25W, MF	
	R...113	57.11.3104	100 KOhm	1%, 0.25W, MF	
	R...114	57.11.3474	470 KOhm	1%, 0.25W, MF	
	R...115	57.11.3682	6.8 KOhm	1%, 0.25W, MF	
	R...116	57.11.3104	100 KOhm	1%, 0.25W, MF	
01	R...116	57.11.3103	10 KOhm	1%, 0.25W, MF	
	R...117	57.11.3222	2.2 KOhm	1%, 0.25W, MF	
	R...118	57.11.3222	2.2 KOhm	1%, 0.25W, MF	
	R...119	57.11.3474	470 KOhm	1%, 0.25W, MF	
	R...120	57.11.3474	470 KOhm	1%, 0.25W, MF	
	R...121	57.11.3124	120 KOhm	1%, 0.25W, MF	
	R...122	57.11.3103	10 KOhm	1%, 0.25W, MF	
	R...123	57.11.3331	330 Ohm	1%, 0.25W, MF	
	R...124	57.11.3751	750 Ohm	1%, 0.25W, MF	
	R...125	57.11.3751	750 Ohm	1%, 0.25W, MF	
	R...126	57.11.3751	750 Ohm	1%, 0.25W, MF	
	R...127	57.11.3751	750 Ohm	1%, 0.25W, MF	
	R...128	57.11.3751	750 Ohm	1%, 0.25W, MF	
	R...129	57.11.3751	750 Ohm	1%, 0.25W, MF	
	R...130	57.11.3751	750 Ohm	1%, 0.25W, MF	
	R...131	57.11.3751	750 Ohm	1%, 0.25W, MF	
	R...132	57.11.3124	120 KOhm	1%, 0.25W, MF	
	R...133	57.11.3103	10 KOhm	1%, 0.25W, MF	
	R...134	57.11.3331	330 Ohm	1%, 0.25W, MF	
	R...135	57.11.3104	100 KOhm	1%, 0.25W, MF	
	R...136	57.11.3104	100 KOhm	1%, 0.25W, MF	
	R...137	57.11.3473	47 KOhm	1%, 0.25W, MF	
	R...138	57.11.3104	100 KOhm	1%, 0.25W, MF	
	R...139	57.11.3682	6.8 KOhm	1%, 0.25W, MF	
	R...140	57.11.5106	10 MOhm	5%, 0.25W, MF	
	R...141	57.11.5106	10 MOhm	5%, 0.25W, MF	
	R...142	57.11.3104	100 KOhm	1%, 0.25W, MF	
	R...143	57.11.3682	6.8 KOhm	1%, 0.25W, MF	
	R...144	57.11.5106	10 MOhm	5%, 0.25W, MF	
	R...145	57.11.5106	10 MOhm	5%, 0.25W, MF	
	R...146	57.11.3473	47 KOhm	1%, 0.25W, MF	
01	R...146	. .		Not Used	
	R...147	57.11.3103	10 KOhm	1%, 0.25W, MF	
	R...148	57.11.3103	10 KOhm	1%, 0.25W, MF	
	R...149	57.11.5106	10 MOhm	5%, 0.25W, MF	
	R...150	57.11.3302	3 KOhm	1%, 0.25W, MF	
	R...151	57.11.3273	27 KOhm	1%, 0.25W, MF	
	R...152	57.11.3474	470 KOhm	1%, 0.25W, MF	
	R...153	57.11.3302	3 KOhm	1%, 0.25W, MF	
	R...154	57.11.3302	3 KOhm	1%, 0.25W, MF	
	R...155	57.11.3474	470 KOhm	1%, 0.25W, MF	
	R...156	57.11.3302	3 KOhm	1%, 0.25W, MF	
	R...157	57.11.3302	3 KOhm	1%, 0.25W, MF	
	R...158	57.11.3302	3 KOhm	1%, 0.25W, MF	
	R...159	57.11.3302	3 KOhm	1%, 0.25W, MF	
	R...160	57.11.3474	470 KOhm	1%, 0.25W, MF	
	R...161	57.11.3474	470 KOhm	1%, 0.25W, MF	
	R...162	57.11.3302	3 KOhm	1%, 0.25W, MF	
	R...163	57.11.3150	15 Ohm	1%, 0.25W, MF	
	R...164	57.11.3302	3 KOhm	1%, 0.25W, MF	
	R...165	57.11.3302	3 KOhm	1%, 0.25W, MF	
	R...166	57.11.3302	3 KOhm	1%, 0.25W, MF	
	R...167	57.11.3302	3 KOhm	1%, 0.25W, MF	
	R...168	57.11.3302	3 KOhm	1%, 0.25W, MF	
	R...169	57.11.3302	3 KOhm	1%, 0.25W, MF	
	R...170	57.11.3302	3 KOhm	1%, 0.25W, MF	
	R...171	57.11.3302	3 KOhm	1%, 0.25W, MF	
	R...172	57.11.3150	15 Ohm	1%, 0.25W, MF	
	R...173	57.11.3474	470 KOhm	1%, 0.25W, MF	
	R...174	57.11.3302	3 KOhm	1%, 0.25W, MF	
	R...176	57.11.3104	100 KOhm	1%, 0.25W, MF	
	R...177	57.11.5106	10 MOhm	5%, 0.25W, MF	
	R...178	57.11.3302	3 KOhm	1%, 0.25W, MF	
	R...179	57.11.3273	27 KOhm	1%, 0.25W, MF	
	R...180	57.11.3474	470 KOhm	1%, 0.25W, MF	
	R...181	57.11.3302	3 KOhm	1%, 0.25W, MF	

1.775.870.00 MONITOR UNIT (CONT.)

Ad	..Pos..	...Ref.No...	Description	
	R...182	57.11.3302	3 KOhm	1%, 0.25W, MF
	R...183	57.11.3474	470 KOhm	1%, 0.25W, MF
	R...184	57.11.3302	3 KOhm	1%, 0.25W, MF
	R...185	57.11.3302	3 KOhm	1%, 0.25W, MF
	R...186	57.11.3302	3 KOhm	1%, 0.25W, MF
	R...187	57.11.3302	3 KOhm	1%, 0.25W, MF
	R...188	57.11.3474	470 KOhm	1%, 0.25W, MF
	R...189	57.11.3150	15 Ohm	1%, 0.25W, MF
	R...190	57.11.3474	470 KOhm	1%, 0.25W, MF
	R...191	57.11.3302	3 KOhm	1%, 0.25W, MF
	R...192	57.11.3302	3 KOhm	1%, 0.25W, MF
	R...193	57.11.3302	3 KOhm	1%, 0.25W, MF
	R...194	57.11.3302	3 KOhm	1%, 0.25W, MF
	R...195	57.11.3302	3 KOhm	1%, 0.25W, MF
	R...196	57.11.3302	3 KOhm	1%, 0.25W, MF
	R...197	57.11.3150	15 Ohm	1%, 0.25W, MF
	R...198	57.11.3302	3 KOhm	1%, 0.25W, MF
	R...199	57.11.3302	3 KOhm	1%, 0.25W, MF
	R...200	57.11.3302	3 KOhm	1%, 0.25W, MF
	R...201	57.11.3474	470 KOhm	1%, 0.25W, MF
	R...202	57.11.3302	3 KOhm	1%, 0.25W, MF
	R...203	57.11.3000	0 Ohm	
01	R...354	57.11.3473	47 KOhm	1%, 0.25W, MF
01	R...370	57.11.3104	100 KOhm	1%, 0.25W, MF
01	R...371	57.11.3102	1 KOhm	1%, 0.25W, MF
	RA....1	57.92.7012		PTC 60V/0.3A
	RA....2	57.92.7012		PTC 60V/0.3A
	RA....3	1.775.340.01	10KOhm	Pot +log
	RA....4	1.775.350.01	2*10KOhm	Pot +log
	RA....5	1.775.350.01	2*10KOhm	Pot +log
	S.....1	55.15.0031	6x 2u	Switch
	S.....2	55.15.0109	1x 2u	Switch
	S.....3	55.15.0110	1x 2u	Switch
	S.....4	55.15.0110	1x 2u	Switch
	S.....5	55.15.0110	1x 2u	Switch

00 KG 91/08/28
01 UL 91/11/04

MF=Metal-film, El=Electrolytic, Cer=Ceramic, PETP=Polyester, PP=Polypropylen

MANUFACTURER: Mot=Motorola, Ra=Raytheon, ST=Studer, NS=National Semiconductor

END

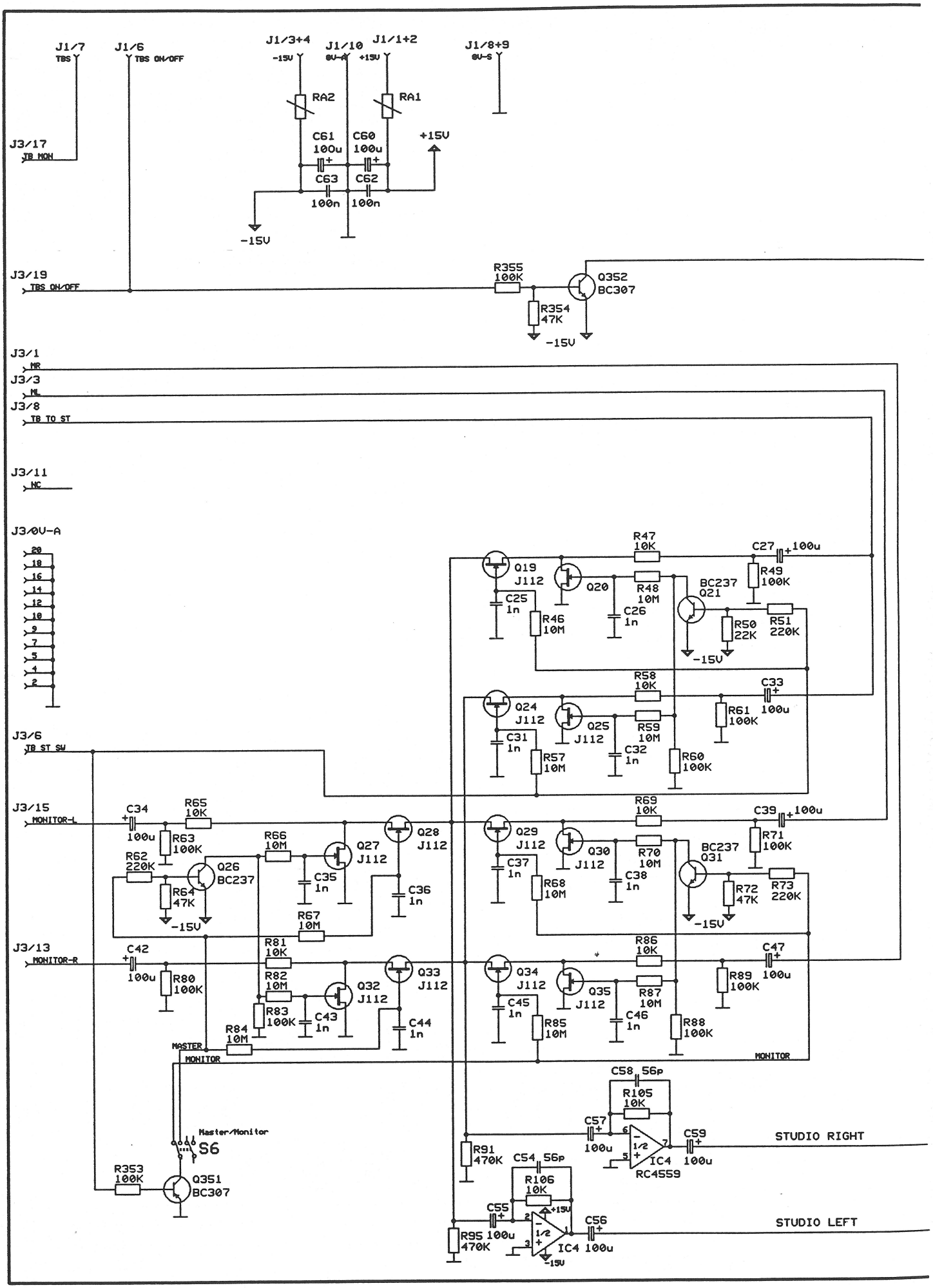
J1/7
TBS
J1/6
TBS ON/OFF
J1/3+4
-15V
J1/10
0V-A
J1/1+2
+15V
J1/8+9
0V-S
RA2
RA1
C61 100u
C60 100u
C63 100n
C62 100n
+15V
-15V
J3/17
TB MON
J3/19
TBS ON/OFF
R355 100K
Q352 BC307
R354 47K
-15V
J3/1
MR
J3/3
ML
J3/8
TB TO ST
J3/11
NC
J3/0V-A
20
18
16
14
12
10
9
7
5
3
2
J3/6
TB ST SW
J3/15
MONITOR-L
J3/13
MONITOR-R
C34 100u
R65 10K
R63 100K
R62 220K
R64 47K
Q26 BC237
-15V
R66 10M
Q27 J112
C35 1n
Q28 J112
C36 1n
R67 10M
C42 100u
R80 100K
R81 10K
R82 10M
R83 100K
Q32 J112
C43 1n
Q33 J112
C44 1n
R84 10M
MASTER
MONITOR
Master/Monitor
S6
R353 100K
Q351 BC307
R47 10K
Q19 J112
Q20
R48 10M
C25 1n
R46 10M
C26 1n
BC237 Q21
C27 100u
R49 100K
R50 22K
R51 220K
-15V
R58 10K
Q24 J112
Q25 J112
R59 10M
C31 1n
R57 10M
C32 1n
R60 100K
C33 100u
R61 100K
R69 10K
Q29 J112
Q30 J112
R70 10M
C37 1n
R68 10M
C38 1n
BC237 Q31
C39 100u
R71 100K
R72 47K
R73 220K
-15V
R86 10K
Q34 J112
Q35 J112
R87 10M
C45 1n
R85 10M
C46 1n
R88 100K
C47 100u
R89 100K
MONITOR
C58 56p
R105 10K
C57 100u
IC4 RC4559
C59 100u
STUDIO RIGHT
R91 470K
C54 56p
R106 10K
C55 100u
R95 470K
+15V
-15V
IC4
C56 100u
STUDIO LEFT

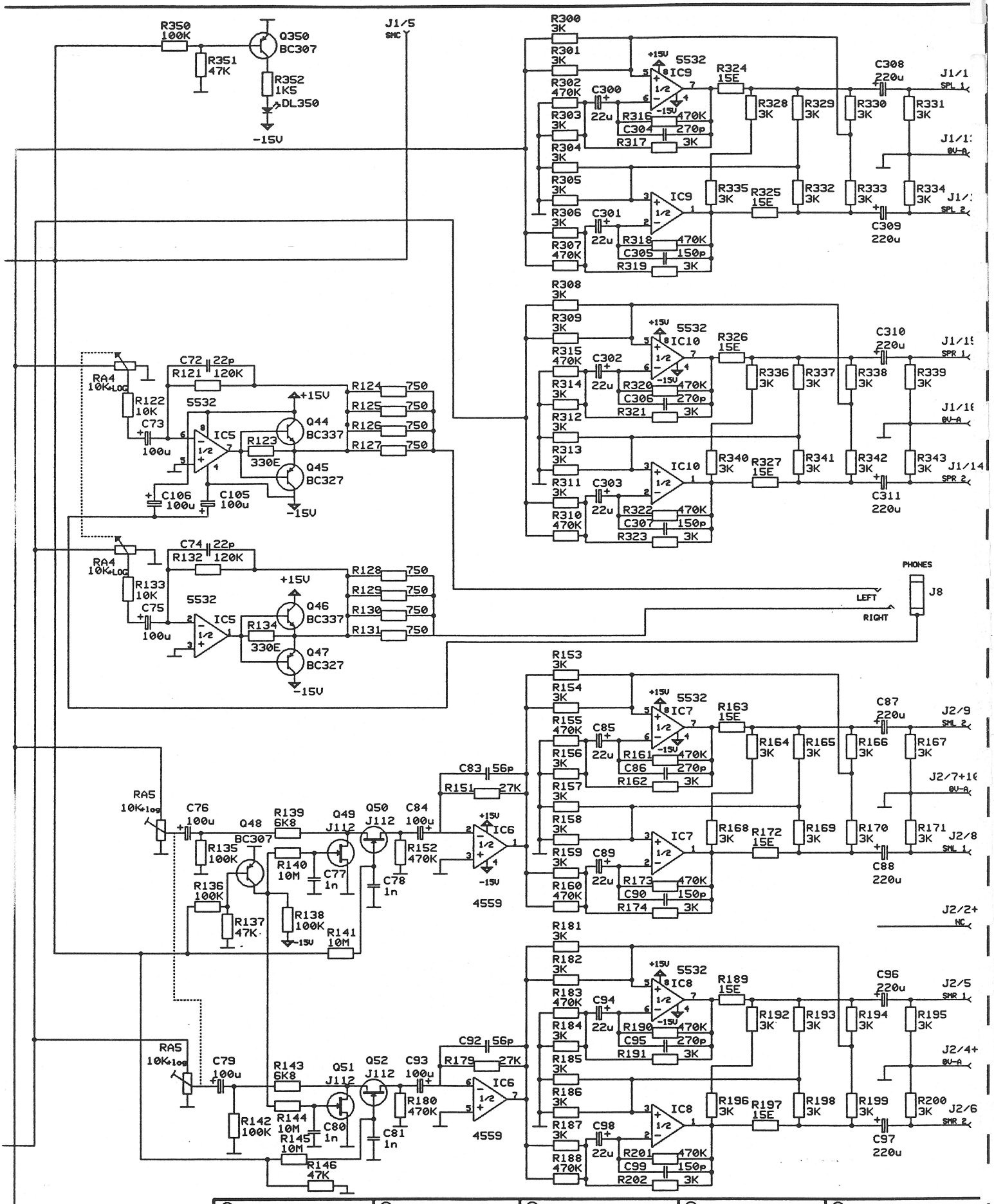

⓪ AUG-20-91 MJ	○ SEP-12-91 UL	○	○	○
	MIXING CONSOLE MB16			PAGE 1 OF 1
REVOX	STUDIO UNIT		SC	1.775.880.00

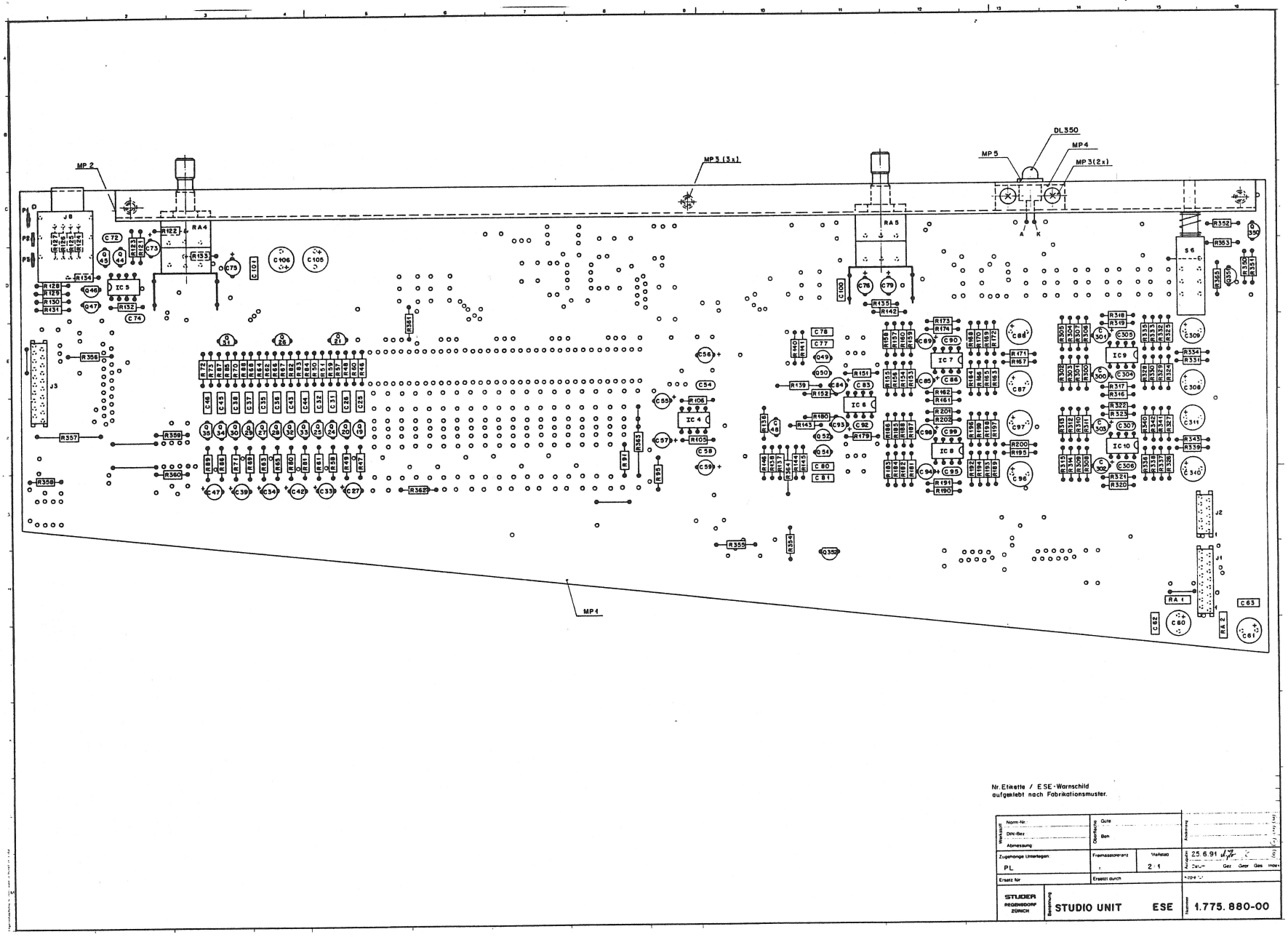

Nr. Etikette / ESE-Warnschild aufgeklebt nach Fabrikationsmuster.

Werkstoff: Norm-Nr. / DIN-Bez. / Abmessung	Oberfläche: Gute / Ben		Änderung
Zugehörige Unterlagen: PL	Fremassstoleranz:	Maßstab: 2:1	Ausgabe: 25.6.91 Datum Ger Ger Ges Index
Ersatz für	Ersatzt durch		
STUDER REGENSDORF ZÜRICH	Benennung: STUDIO UNIT ESE		Nummer: 1.775.880-00

1.775.880.00 STUDIO UNIT

Ad	..Pos..	...Ref.No...	Description			
	C....25	59.06.0102	1 nF	10%, 25V,	PETP	
	C....26	59.06.0102	1 nF	10%, 25V,	PETP	
	C....27	59.22.3101	100 uF	-20%, 10V,	EL	
	C....31	59.06.0102	1 nF	10%, 25V,	PETP	
	C....32	59.06.0102	1 nF	10%, 25V,	PETP	
	C....33	59.22.3101	100 uF	-20%, 10V,	EL	
	C....34	59.22.3101	100 uF	-20%, 10V,	EL	
	C....35	59.06.0102	1 nF	10%, 25V,	PETP	
	C....36	59.06.0102	1 nF	10%, 25V,	PETP	
	C....37	59.06.0102	1 nF	10%, 25V,	PETP	
	C....38	59.06.0102	1 nF	10%, 25V,	PETP	
	C....39	59.22.3101	100 uF	-20%, 10V,	EL	
	C....42	59.22.3101	100 uF	-20%, 10V,	EL	
	C....43	59.06.0102	1 nF	10%, 25V,	PETP	
	C....44	59.06.0102	1 nF	10%, 25V,	PETP	
	C....45	59.06.0102	1 nF	10%, 25V,	PETP	
	C....46	59.06.0102	1 nF	10%, 25V,	PETP	
	C....47	59.22.3101	100 uF	-20%, 10V,	EL	
	C....54	59.34.4560	56 pF	5%, 25V,	C	
	C....55	59.22.3101	100 uF	-20%, 10V,	EL	
	C....56	59.22.3101	100 uF	-20%, 10V,	EL	
	C....57	59.22.3101	100 uF	-20%, 10V,	EL	
	C....58	59.34.4560	56 pF	5%, 25V,	C	
	C....59	59.22.3101	100 uF	-20%, 10V,	EL	
	C....60	59.22.5101	100 uF	-20V, 25V,	EL	
	C....61	59.22.5101	100 uF	-20V, 25V,	EL	
	C....62	59.06.0104	100 nF	10%, 25V,	PETP	
	C....63	59.06.0104	100 nF	10%, 25V,	PETP	
	C....72	59.34.2220	22 pF	10%, 25V,	C	
	C....73	59.22.3101	100 uF	-20%, 10V,	EL	
	C....74	59.34.2220	22 pF	10%, 25V,	C	
	C....75	59.22.3101	100 uF	-20%, 10V,	EL	
	C....76	59.22.3101	100 uF	-20%, 10V,	EL	
	C....77	59.06.0102	1 nF	10%, 25V,	PETP	
	C....78	59.06.0102	1 nF	10%, 25V,	PETP	
	C....79	59.22.3101	100 uF	-20%, 10V,	EL	
	C....80	59.06.0102	1 nF	10%, 25V,	PETP	
	C....81	59.06.0102	1 nF	10%, 25V,	PETP	
	C....83	59.34.4560	56 pF	5%, 25V,	C	
	C....84	59.22.3101	100 uF	-20%, 10V,	EL	
	C....85	59.22.5220	22 uF	-20%, 10V,	EL	
	C....86	59.34.4271	270 pF	5%, 25V,	C	
	C....87	59.22.3221	220 uF	-20%, 10V,	EL	
	C....88	59.22.3221	220 uF	-20%, 10V,	EL	
	C....89	59.22.5220	22 uF	-20%, 10V,	EL	
	C....90	59.34.4151	150 pF	5%, 25V,	C	
	C....92	59.34.4560	56 pF	5%, 25V,	C	
	C....93	59.22.3101	100 uF	-20%, 10V,	EL	
	C....94	59.22.5220	22 uF	-20%, 10V,	EL	
	C....95	59.34.4271	270 pF	5%, 25V,	C	
	C....96	59.22.3221	220 uF	-20%, 10V,	EL	
	C....97	59.22.3221	220 uF	-20%, 10V,	EL	
	C....98	59.22.5220	22 uF	-20%, 10V,	EL	
	C....99	59.34.4151	150 pF	5%, 25V,	C	
	C...100	59.06.0104	100 nF	10%, 25V,	PETP	
	C...101	59.06.0104	100 nF	10%, 25V,	PETP	
	C...105	59.22.5101	100 uF	-20%, 25V,	EL	
	C...106	59.22.5101	100 uF	-20%, 25V,	EL	
	C...300	59.22.5220	22 uF	-20%, 10V,	EL	
	C...301	59.22.5220	22 uF	-20%, 10V,	EL	
	C...302	59.22.5220	22 uF	-20%, 10V,	EL	
	C...303	59.22.5220	22 uF	-20%, 10V,	EL	
	C...304	59.34.4271	270 pF	5%, 25V,	C	
	C...305	59.34.4151	150 pF	5%, 25V,	C	
	C...306	59.34.4271	270 pF	5%, 25V,	C	
	C...307	59.34.4151	150 pF	5%, 25V,	C	
	C...308	59.22.3221	220 uF	-20%, 10V,	EL	
	C...309	59.22.3221	220 uF	-20%, 10V,	EL	
	C...310	59.22.3221	220 uF	-20%, 10V,	EL	
	C...311	59.22.3221	220 uF	-20%, 10V,	EL	
	DL..350	50.04.2502		LED rt/dif		
	IC....4	50.09.0107	RC4559			Ra
	IC....5	50.09.0106	5532AN			NS
	IC....6	50.09.0107	RC4559			Ra
	IC....7	50.09.0106	5532AN			NS
	IC....8	50.09.0106	5532AN			NS
	IC....9	50.09.0106	5532AN			NS
	IC...10	50.09.0106	5532AN			NS
	J.....1	54.14.5516	16-Pole	Jack	Micro Match	
	J.....2	54.14.5510	10-Pole	Jack	Micro Match	
	J.....3	54.14.5520	20-Pole	Jack	Micro Match	
	J.....8	1.710.350.02	Stereo	Jack Socket		
	MP....1	1.775.870.11		MONITOR UNIT PCB		
01	MP....1	1.775.870.12		MONITOR UNIT PCB		
	MP....2	1.775.518.02		U-Profil Mic		
	MP....3	21.38.1352	5 pcs	Screw		
	MP....4	1.775.518.04		Holder		
	MP....5	50.20.0411		LED Holder		
	P.....1	54.02.0320		Testpoint male,flatpin 2.8*0.8		
	P.....2	54.02.0320		Testpoint male,flatpin 2.8*0.8		
	P.....3	54.02.0320		Testpoint male,flatpin 2.8*0.8		
	Q....19	50.03.0350	J 112	FET		Mot
	Q....20	50.03.0350	J 112	FET		Mot
	Q....21	50.03.0436	BC237	NPN		
	Q....24	50.03.0350	J 112	FET		Mot
	Q....25	50.03.0350	J 112	FET		Mot
	Q....26	50.03.0436	BC237	NPN		
	Q....27	50.03.0350	J 112	FET		Mot
	Q....28	50.03.0350	J 112	FET		Mot
	Q....29	50.03.0350	J 112	FET		Mot
	Q....30	50.03.0350	J 112	FET		Mot
	Q....31	50.03.0436	BC237	NPN		
	Q....32	50.03.0350	J 112	FET		Mot
	Q....33	50.03.0350	J 112	FET		Mot
	Q....34	50.03.0350	J 112	FET		Mot
	Q....35	50.03.0350	J 112	FET		Mot
	Q....44	50.03.0516	BC337	NPN match		
	Q....45	50.03.0351	BC327	PNP match		
	Q....46	50.03.0516	BC337	NPN match		
	Q....47	50.03.0351	BC327	PNP match		
	Q....48	50.03.0515	BC307	PNP		
	Q....49	50.03.0350	J 112	FET		Mot
	Q....50	50.03.0350	J 112	FET		Mot
	Q....51	50.03.0350	J 112	FET		Mot
	Q....52	50.03.0350	J 112	FET		Mot
	Q...350	50.03.0515	BC307	PNP		
	Q...351	50.03.0515	BC307	PNP		
	Q...352	50.03.0515	BC307	PNP		
01	Q...352	50.03.0436	BC237	NPN		
	R....46	57.11.5106	10 MOhm	5%, 0.25W, MF		
	R....47	57.11.3103	10 KOhm	1%, 0.25W, MF		
	R....48	57.11.5106	10 MOhm	5%, 0.25W, MF		
	R....49	57.11.3104	100 KOhm	1%, 0.25W, MF		
	R....50	57.11.3473	47 KOhm	1%, 0.25W, MF		
01	R....50	57.11.3223	22 KOhm	1%, 0.25W, MF		
	R....51	57.11.3224	220 KOhm	1%, 0.25W, MF		
	R....57	57.11.5106	10 MOhm	5%, 0.25W, MF		
	R....58	57.11.3103	10 KOhm	1%, 0.25W, MF		
	R....59	57.11.5106	10 MOhm	5%, 0.25W, MF		
	R....60	57.11.3104	100 KOhm	1%, 0.25W, MF		
	R....61	57.11.3104	100 KOhm	1%, 0.25W, MF		
	R....62	57.11.3224	220 KOhm	1%, 0.25W, MF		
	R....63	57.11.3104	100 KOhm	1%, 0.25W, MF		
	R....64	57.11.3473	47 KOhm	1%, 0.25W, MF		
	R....65	57.11.3103	10 KOhm	1%, 0.25W, MF		
	R....66	57.11.5106	10 MOhm	5%, 0.25W, MF		
	R....67	57.11.5106	10 MOhm	5%, 0.25W, MF		
	R....68	57.11.5106	10 MOhm	5%, 0.25W, MF		
	R....69	57.11.3103	10 KOhm	1%, 0.25W, MF		
	R....70	57.11.5106	10 MOhm	5%, 0.25W, MF		
	R....71	57.11.3104	100 KOhm	1%, 0.25W, MF		
	R....72	57.11.3473	47 KOhm	1%, 0.25W, MF		
	R....73	57.11.3224	220 KOhm	1%, 0.25W, MF		
	R....80	57.11.3104	100 KOhm	1%, 0.25W, MF		
	R....81	57.11.3103	10 KOhm	1%, 0.25W, MF		
	R....82	57.11.5106	10 MOhm	5%, 0.25W, MF		
	R....83	57.11.3104	100 KOhm	1%, 0.25W, MF		
	R....84	57.11.5106	10 MOhm	5%, 0.25W, MF		
	R....85	57.11.5106	10 MOhm	5%, 0.25W, MF		
	R....86	57.11.3103	10 KOhm	1%, 0.25W, MF		
	R....87	57.11.5106	10 MOhm	5%, 0.25W, MF		
	R....88	57.11.3104	100 KOhm	1%, 0.25W, MF		
	R....89	57.11.3104	100 KOhm	1%, 0.25W, MF		
	R....91	57.11.3474	470 KOhm	1%, 0.25W, MF		
	R....95	57.11.3474	470 KOhm	1%, 0.25W, MF		
	R...105	57.11.3103	10 KOhm	1%, 0.25W, MF		
	R...106	57.11.3103	10 KOhm	1%, 0.25W, MF		
	R...121	57.11.3124	120 KOhm	1%, 0.25W, MF		
	R...122	57.11.3103	10 KOhm	1%, 0.25W, MF		
	R...123	57.11.3331	330 Ohm	1%, 0.25W, MF		
	R...124	57.11.3751	750 Ohm	1%, 0.25W, MF		
	R...125	57.11.3751	750 Ohm	1%, 0.25W, MF		
	R...126	57.11.3751	750 Ohm	1%, 0.25W, MF		
	R...127	57.11.3751	750 Ohm	1%, 0.25W, MF		
	R...128	57.11.3751	750 Ohm	1%, 0.25W, MF		
	R...129	57.11.3751	750 Ohm	1%, 0.25W, MF		
	R...130	57.11.3751	750 Ohm	1%, 0.25W, MF		
	R...131	57.11.3751	750 Ohm	1%, 0.25W, MF		
	R...132	57.11.3124	120 KOhm	1%, 0.25W, MF		
	R...133	57.11.3103	10 KOhm	1%, 0.25W, MF		
	R...134	57.11.3331	330 Ohm	1%, 0.25W, MF		
	R...135	57.11.3104	100 KOhm	1%, 0.25W, MF		
	R...136	57.11.3104	100 KOhm	1%, 0.25W, MF		
	R...137	57.11.3473	47 KOhm	1%, 0.25W, MF		
	R...138	57.11.3104	100 KOhm	1%, 0.25W, MF		
	R...139	57.11.3682	6.8 KOhm	1%, 0.25W, MF		
	R...140	57.11.5106	10 MOhm	5%, 0.25W, MF		
	R...141	57.11.5106	10 MOhm	5%, 0.25W, MF		
	R...142	57.11.3104	100 KOhm	1%, 0.25W, MF		
	R...143	57.11.3682	6.8 KOhm	1%, 0.25W, MF		
	R...144	57.11.5106	10 MOhm	5%, 0.25W, MF		
	R...145	57.11.5106	10 MOhm	5%, 0.25W, MF		
	R...146	57.11.3473	47 KOhm	1%, 0.25W, MF		
	R...151	57.11.3273	27 KOhm	1%, 0.25W, MF		
	R...152	57.11.3474	470 KOhm	1%, 0.25W, MF		
	R...153	57.11.3302	3 KOhm	1%, 0.25W, MF		

1.775.880.00 STUDIO UNIT (CONT.)

Ad	..Pos..	...Ref.No...	Description		
	R...154	57.11.3302	3 KOhm	1%, 0.25W, MF	
	R...155	57.11.3474	470 KOhm	1%, 0.25W, MF	
	R...156	57.11.3302	3 KOhm	1%, 0.25W, MF	
	R...157	57.11.3302	3 KOhm	1%, 0.25W, MF	
	R...158	57.11.3302	3 KOhm	1%, 0.25W, MF	
	R...159	57.11.3302	3 KOhm	1%, 0.25W, MF	
	R...160	57.11.3474	470 KOhm	1%, 0.25W, MF	
	R...161	57.11.3474	470 KOhm	1%, 0.25W, MF	
	R...162	57.11.3302	3 KOhm	1%, 0.25W, MF	
	R...163	57.11.3150	15 Ohm	1%, 0.25W, MF	
	R...164	57.11.3302	3 KOhm	1%, 0.25W, MF	
	R...165	57.11.3302	3 KOhm	1%, 0.25W, MF	
	R...166	57.11.3302	3 KOhm	1%, 0.25W, MF	
	R...167	57.11.3302	3 KOhm	1%, 0.25W, MF	
	R...168	57.11.3302	3 KOhm	1%, 0.25W, MF	
	R...169	57.11.3302	3 KOhm	1%, 0.25W, MF	
	R...170	57.11.3302	3 KOhm	1%, 0.25W, MF	
	R...171	57.11.3302	3 KOhm	1%, 0.25W, MF	
	R...172	57.11.3150	15 Ohm	1%, 0.25W, MF	
	R...173	57.11.3474	470 KOhm	1%, 0.25W, MF	
	R...174	57.11.3302	3 KOhm	1%, 0.25W, MF	
	R...179	57.11.3273	27 KOhm	1%, 0.25W, MF	
	R...180	57.11.3474	470 KOhm	1%, 0.25W, MF	
	R...181	57.11.3302	3 KOhm	1%, 0.25W, MF	
	R...182	57.11.3302	3 KOhm	1%, 0.25W, MF	
	R...183	57.11.3474	470 KOhm	1%, 0.25W, MF	
	R...184	57.11.3302	3 KOhm	1%, 0.25W, MF	
	R...185	57.11.3302	3 KOhm	1%, 0.25W, MF	
	R...186	57.11.3302	3 KOhm	1%, 0.25W, MF	
	R...187	57.11.3302	3 KOhm	1%, 0.25W, MF	
	R...188	57.11.3474	470 KOhm	1%, 0.25W, MF	
	R...189	57.11.3150	15 Ohm	1%, 0.25W, MF	
	R...190	57.11.3474	470 KOhm	1%, 0.25W, MF	
	R...191	57.11.3302	3 KOhm	1%, 0.25W, MF	
	R...192	57.11.3302	3 KOhm	1%, 0.25W, MF	
	R...193	57.11.3302	3 KOhm	1%, 0.25W, MF	
	R...194	57.11.3302	3 KOhm	1%, 0.25W, MF	
	R...195	57.11.3302	3 KOhm	1%, 0.25W, MF	
	R...196	57.11.3302	3 KOhm	1%, 0.25W, MF	
	R...197	57.11.3150	15 Ohm	1%, 0.25W, MF	
	R...198	57.11.3302	3 KOhm	1%, 0.25W, MF	
	R...199	57.11.3302	3 KOhm	1%, 0.25W, MF	
	R...200	57.11.3302	3 KOhm	1%, 0.25W, MF	
	R...201	57.11.3474	470 KOhm	1%, 0.25W, MF	
	R...202	57.11.3302	3 KOhm	1%, 0.25W, MF	
	R...300	57.11.3302	3 KOhm	1%, 0.25W, MF	
	R...301	57.11.3302	3 KOhm	1%, 0.25W, MF	
	R...302	57.11.3474	470 KOhm	1%, 0.25W, MF	
	R...303	57.11.3302	3 KOhm	1%, 0.25W, MF	
	R...304	57.11.3302	3 KOhm	1%, 0.25W, MF	
	R...305	57.11.3302	3 KOhm	1%, 0.25W, MF	
	R...306	57.11.3302	3 KOhm	1%, 0.25W, MF	
	R...307	57.11.3474	470 KOhm	1%, 0.25W, MF	
	R...308	57.11.3302	3 KOhm	1%, 0.25W, MF	
	R...309	57.11.3302	3 KOhm	1%, 0.25W, MF	
	R...310	57.11.3474	470 KOhm	1%, 0.25W, MF	
	R...311	57.11.3302	3 KOhm	1%, 0.25W, MF	
	R...312	57.11.3302	3 KOhm	1%, 0.25W, MF	
	R...313	57.11.3302	3 KOhm	1%, 0.25W, MF	
	R...314	57.11.3302	3 KOhm	1%, 0.25W, MF	
	R...315	57.11.3474	470 KOhm	1%, 0.25W, MF	
	R...316	57.11.3474	470 KOhm	1%, 0.25W, MF	
	R...317	57.11.3302	3 KOhm	1%, 0.25W, MF	
	R...318	57.11.3474	470 KOhm	1%, 0.25W, MF	
	R...319	57.11.3302	3 KOhm	1%, 0.25W, MF	
	R...320	57.11.3470	470 KOhm	1%, 0.25W, MF	
	R...321	57.11.3302	3 KOhm	1%, 0.25W, MF	
	R...322	57.11.3474	470 KOhm	1%, 0.25W, MF	
	R...323	57.11.3302	3 KOhm	1%, 0.25W, MF	
	R...324	57.11.3150	15 Ohm	1%, 0.25W, MF	
	R...325	57.11.3150	15 Ohm	1%, 0.25W, MF	
	R...326	57.11.3150	15 Ohm	1%, 0.25W, MF	
	R...327	57.11.3150	15 Ohm	1%, 0.25W, MF	
	R...328	57.11.3302	3 KOhm	1%, 0.25W, MF	
	R...329	57.11.3302	3 KOhm	1%, 0.25W, MF	
	R...330	57.11.3302	3 KOhm	1%, 0.25W, MF	
	R...331	57.11.3302	3 KOhm	1%, 0.25W, MF	
	R...332	57.11.3302	3 KOhm	1%, 0.25W, MF	
	R...333	57.11.3302	3 KOhm	1%, 0.25W, MF	
	R...334	57.11.3302	3 KOhm	1%, 0.25W, MF	
	R...335	57.11.3302	3 KOhm	1%, 0.25W, MF	
	R...336	57.11.3302	3 KOhm	1%, 0.25W, MF	
	R...337	57.11.3302	3 KOhm	1%, 0.25W, MF	
	R...338	57.11.3302	3 KOhm	1%, 0.25W, MF	
	R...339	57.11.3302	3 KOhm	1%, 0.25W, MF	
	R...340	57.11.3302	3 KOhm	1%, 0.25W, MF	
	R...341	57.11.3302	3 KOhm	1%, 0.25W, MF	
	R...342	57.11.3302	3 KOhm	1%, 0.25W, MF	
	R...343	57.11.3302	3 KOhm	1%, 0.25W, MF	
	R...350	57.11.3104	100 KOhm	1%, 0.25W, MF	
	R...351	57.11.3473	47 KOhm	1%, 0.25W, MF	
	R...352	57.11.3152	1.5 KOhm	1%, 0.25W, MF	
	R...353	57.11.3473	47 KOhm	1%, 0.25W, MF	
01	R...353	57.11.3114	100 KOhm	1%, 0.25W, MF	
	R...354	57.11.3473	47 KOhm	1%, 0.25W, MF	
	R...355	57.11.3104	100 KOhm	1%, 0.25W, MF	
	R...356	57.11.3000	0 Ohm		
	R...357	57.11.3000	0 Ohm		
	R...358	57.11.3000	0 Ohm		
	R...359	57.11.3000	0 Ohm		
	R...360	57.11.3000	0 Ohm		
	R...361	57.11.3000	0 Ohm		
	R...362	57.11.3000	0 Ohm		
	R...363	57.11.3000	0 Ohm		
	R...364	57.11.3000	0 Ohm		
	R...365	57.11.3000	0 Ohm		
	RA....1	57.92.7012		PTC 60V/0.3A	
	RA....2	57.92.7012		PTC 60V/0.3A	
	RA....4	1.775.350.01	2*10KOhm	Pot +log	
	RA....5	1.775.350.01	2*10KOhm	Pot +log	
	S.....6	55.15.0109	1x 2u	Switch	

00 KG 91/08/28
01 UL 91/11/04

MF=Metal-film, El=Electrolytic, Cer=Ceramic, PETP=Polyester, PP=Polypropylen

MANUFACTURER: Mot=Motorola, Ra=Raytheon, ST=Studer, NS=National Semiconductor

END

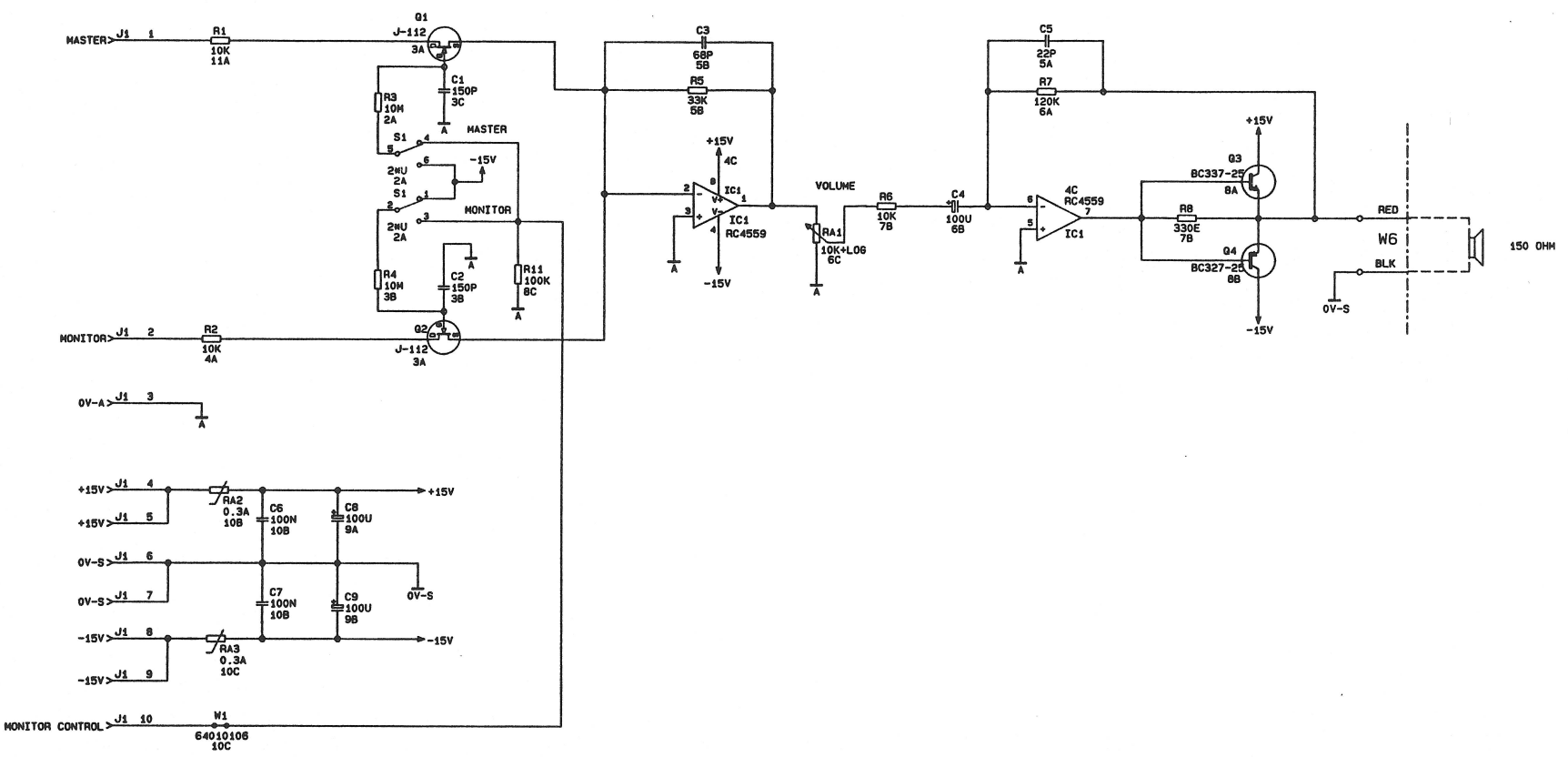

⓪ 28.08.91 MOT	○	○	○	○	PAGE 1 OF 1
REVOX	SPEAKER UNIT			SC	1.775.890-00

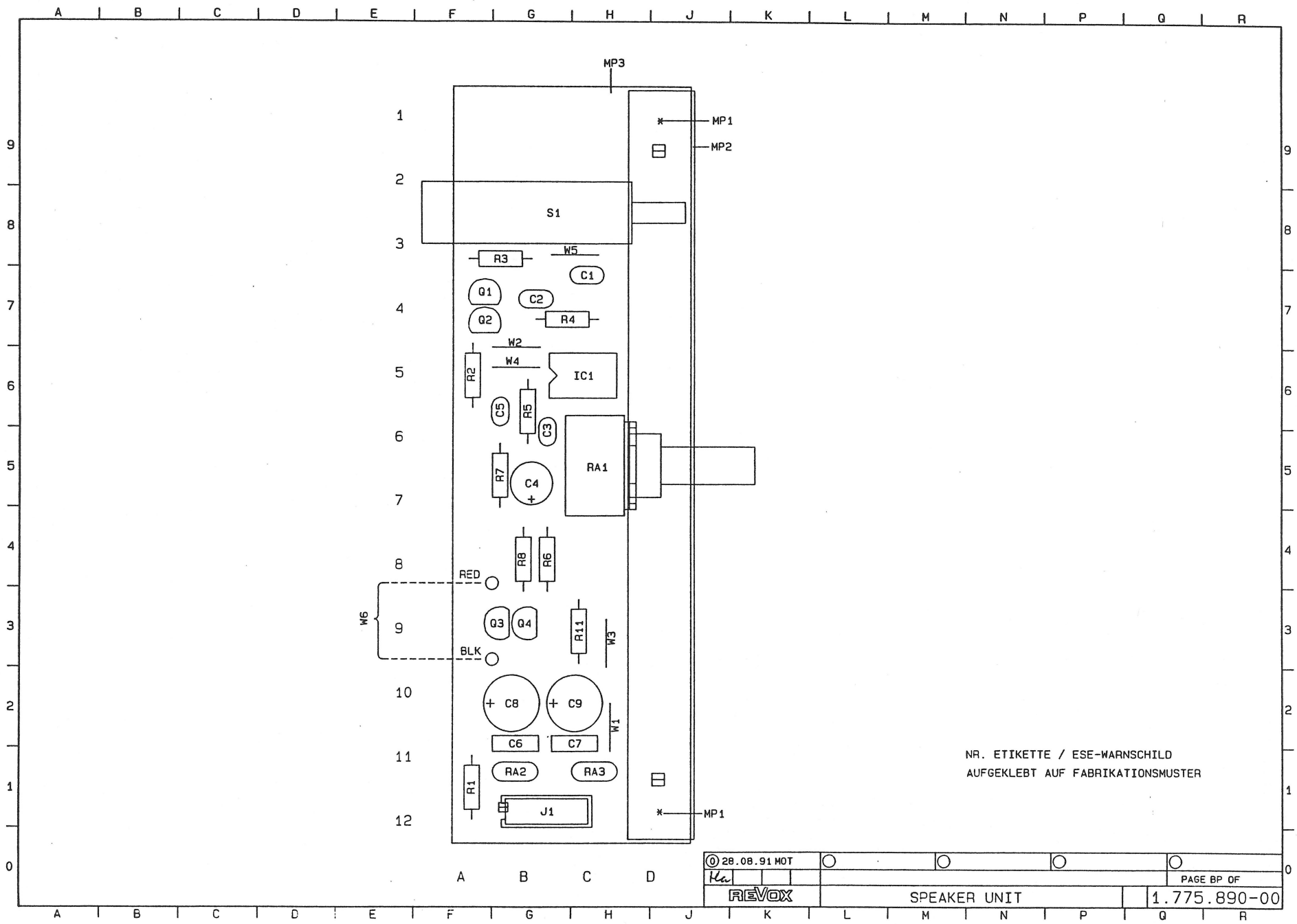
MP3
MP1
MP2
S1
R3
W5
C1
Q1
C2
Q2
R4
W2
W4
R2
IC1
C5
R5
C3
RA1
R7
C4
R8
R6
RED
W6
Q3
Q4
R11
W3
BLK
C8
C9
W1
C6
C7
RA2
RA3
R1
J1
MP1
NR. ETIKETTE / ESE-WARNSCHILD
AUFGEKLEBT AUF FABRIKATIONSMUSTER
28.08.91 MOT
PAGE BP OF
REVOX
SPEAKER UNIT
1.775.890-00

1.775.890.00 SPEAKER UNIT

Ad	..Pos..	...Ref.No...	Description			
	C.....1	59.34.4151	150p	5 %,	63V,	N750
	C.....2	59.34.4151	150p	5 %,	63V,	N750
	C.....3	59.34.4680	68p	5 %,	63V,	N750
	C.....4	59.22.3101	100u	-20/+50 %,	10V	
	C.....5	59.34.2220	22p	5 %,	63V,	N150
	C.....6	59.06.0104	100n	10 %,	63V	
	C.....7	59.06.0104	100n	10 %,	63V	
	C.....8	59.22.5101	100u	-20/+50 %,	25V	
	C.....9	59.22.5101	100u	-20/+50 %,	25V	
	IC....1	50.09.0107	RC4559	DIP08, DUAL LINEAR OPAMP		
	J.....1	54.14.5510	10-P	VERT,	FEM., J-MICRO-MATCH	
	MP....1	21.38.1352	2 pcs	Screw M3		
	MP....2	1.775.890.02		Print holder		
	MP....3	1.775.890.11		Speaker Unit PCB		
	Q.....1	50.03.0350	J-112	NFET,	TO92-5	
	Q.....2	50.03.0350	J-112	NFET,	TO92-5	
	Q.....3	50.43.0340	BC337-25	NPN,	TO92-1	
	Q.....4	50.03.0351	BC327-25	PNP,	TO92-1	
	R.....1	57.11.3103	10k	1 %,	0.6W,	MF
	R.....2	57.11.3103	10k	1 %,	0.6W,	MF
	R.....3	57.11.5106	10M	5 %,	0.4W,	MF
	R.....4	57.11.5106	10M	5 %,	0.4W,	MF
	R.....5	57.11.3333	33k	1 %,	0.6W,	MF
	R.....6	57.11.3103	10k	1 %,	0.6W,	MF
	R.....7	57.11.3124	120k	1 %,	0.6W,	MF
	R.....8	57.11.3331	330E	1 %,	0.6W,	MF
	R....11	57.11.3104	100k	1 %,	0.6W,	MF
	RA....1	1.775.340.01	10k+LOG	20 %,	270DEG.,	POTENTIOMETER
	RA....2	57.92.7012	0.3A	60V,	R-PTC	
	RA....3	57.92.7012	0.3A	60V,	R-PTC	
	S.....1	55.15.0109	2*U	PUSH BUTTON SWITCH		
	W.....1	64.01.0106	7.62mm	0.60MM, WIRE BRIDGE		
	W.....2	64.01.0106	7.62mm	0.60MM, WIRE BRIDGE		
	W.....3	64.01.0106	7.62mm	0.60MM, WIRE BRIDGE		
	W.....4	64.01.0106	7.62mm	0.60MM, WIRE BRIDGE		
	W.....5	64.01.0106	7.62mm	0.60MM, WIRE BRIDGE		
	W.....6	1.775.890.93		Wire-list Speaker Unit		

00 KG 91/08/28

EL=Electrolytic,C=Ceramic, PETP=Polyester

MF=Metal Film

MANUFACTURER: dbx=dbx Incorparated,NS=National Semiconductor,Mot=Motorola
RA=Raytheon,SIG=Signetics,TI=Texas Instruments

END

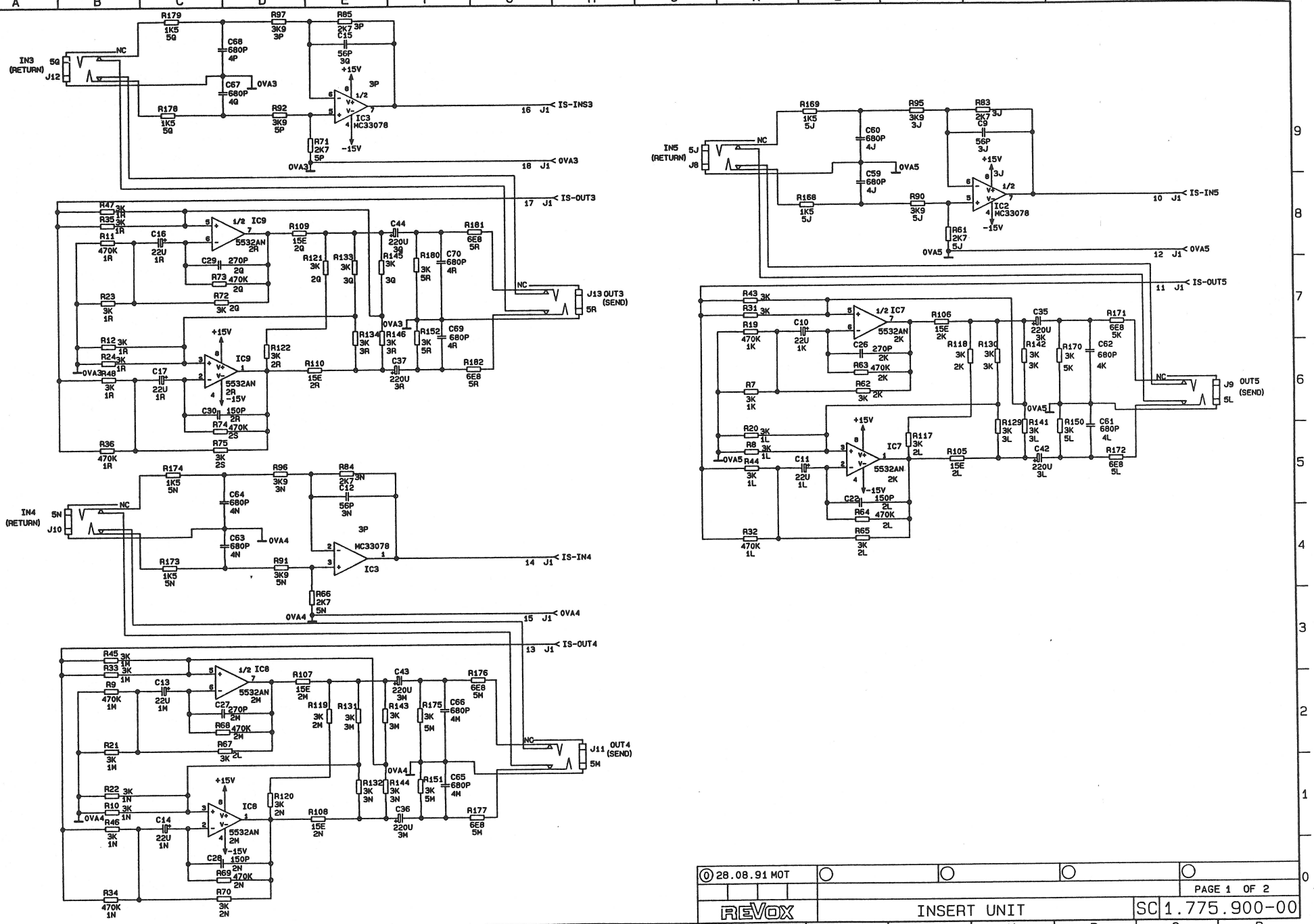

⓪ 28.08.91 MOT				PAGE 1 OF 2
REVOX	INSERT UNIT		SC	1.775.900-00

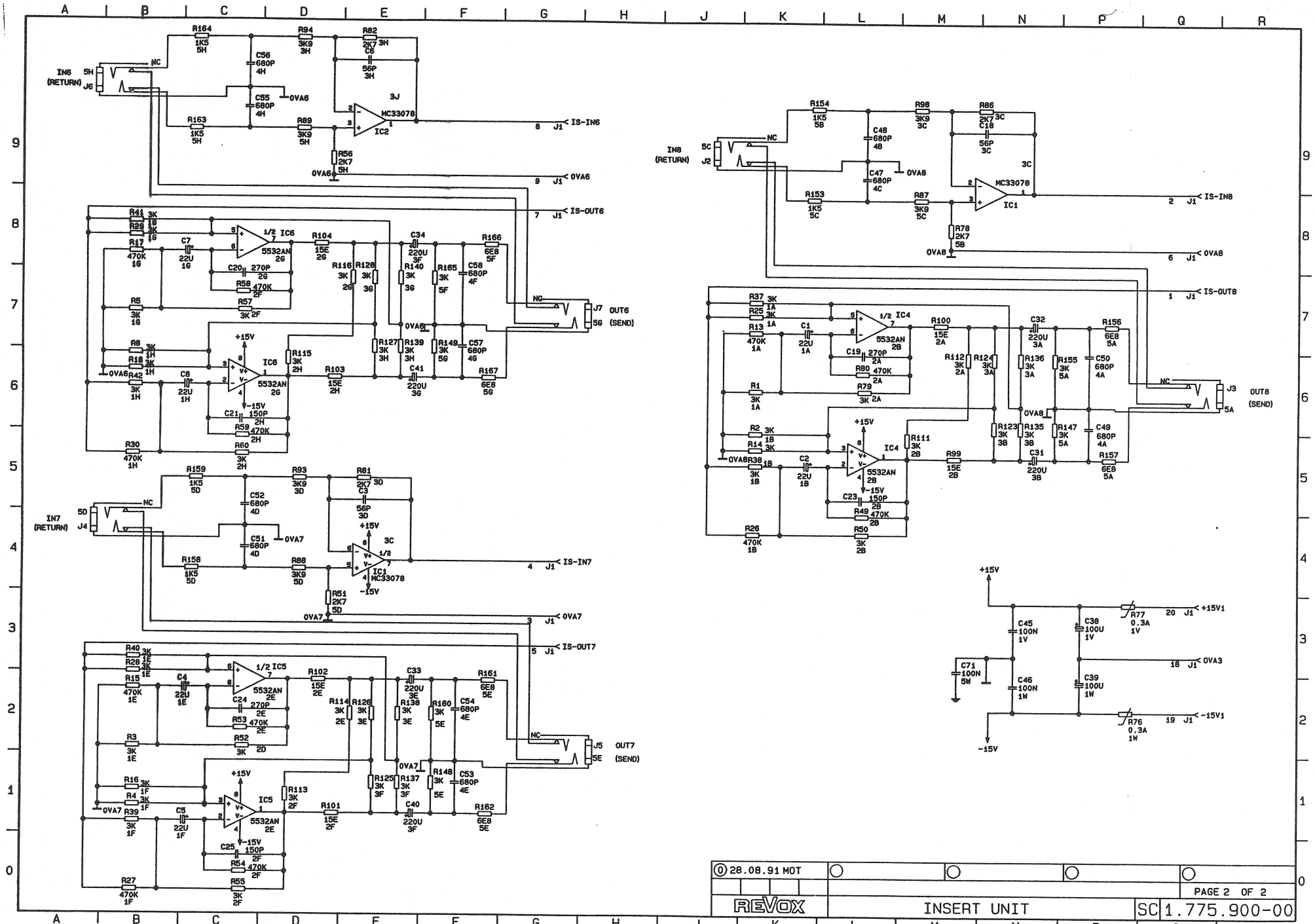
IN6 (RETURN) J6
IS-IN6
IS-OUT6
OUT6 (SEND) J7
IN7 (RETURN) J4
IS-IN7
IS-OUT7
OUT7 (SEND) J5
IN8 (RETURN) J2
IS-IN8
IS-OUT8
OUT8 (SEND) J3
+15V
-15V
0VA6
0VA7
0VA8
0VA3
+15V1
-15V1
MC33078
5532AN
1/2 IC6
1/2 IC5
1/2 IC4
IC1
IC2
IC4
IC5
IC6
28.08.91 MOT
REVOX
INSERT UNIT
SC 1.775.900-00
PAGE 2 OF 2

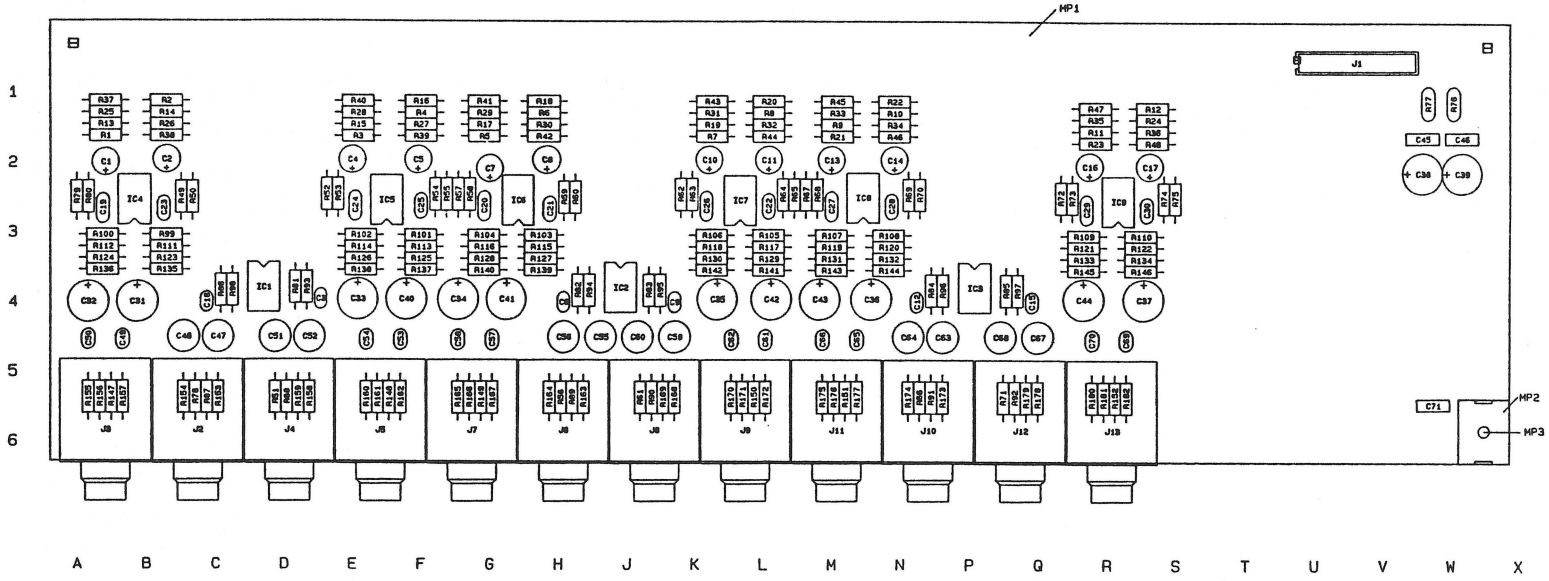

NR. ETIKETTE / ESE WARNSCHILD

AUFGEKLEBT NACH FABRIKATIONSMUSTER

⓪ 28.08.91 MOT					
Ha					PAGE BP OF
REVOX	INSERT UNIT			BP	1.775.900-00

1.775.900.00 INSERT UNIT

Ad	..Pos..	...Ref.No...	Description			
	C.....1	59.22.5220	22u	-20/+50 %,	25V	
	C.....2	59.22.5220	22u	-20/+50 %,	25V	
	C.....3	59.34.4560	56p	5 %,	63V,	N750
	C.....4	59.22.5220	22u	-20/+50 %,	25V	
	C.....5	59.22.5220	22u	-20/+50 %,	25V	
	C.....6	59.34.4560	56p	5 %,	63V,	N750
	C.....7	59.22.5220	22u	-20/+50 %,	25V	
	C.....8	59.22.5220	22u	-20/+50 %,	25V	
	C.....9	59.34.4560	56p	5 %,	63V,	N750
	C....10	59.22.5220	22u	-20/+50 %,	25V	
	C....11	59.22.5220	22u	-20/+50 %,	25V	
	C....12	59.34.4560	56p	5 %,	63V,	N750
	C....13	59.22.5220	22u	-20/+50 %,	25V	
	C....14	59.22.5220	22u	-20/+50 %,	25V	
	C....15	59.34.4560	56p	5 %,	63V,	N750
	C....16	59.22.5220	22u	-20/+50 %,	25V	
	C....17	59.22.5220	22u	-20/+50 %,	25V	
	C....18	59.34.4560	56p	5 %,	63V,	N750
	C....19	59.34.4271	270p	5 %,	63V,	N750
	C....20	59.34.4271	270p	5 %,	63V,	N750
	C....21	59.34.4151	150p	5 %,	63V,	N750
	C....22	59.34.4151	150p	5 %,	63V,	N750
	C....23	59.34.4151	150p	5 %,	63V,	N750
	C....24	59.34.4271	270p	5 %,	63V,	N750
	C....25	59.34.4151	150p	5 %,	63V,	N750
	C....26	59.34.4271	270p	5 %,	63V,	N750
	C....27	59.34.4271	270p	5 %,	63V,	N750
	C....28	59.34.4151	150p	5 %,	63V,	N750
	C....29	59.34.4271	270p	5 %,	63V,	N750
	C....30	59.34.4151	150p	5 %,	63V,	N750
	C....31	59.22.3221	220u	-20/+50 %,	10V	
	C....32	59.22.3221	220u	-20/+50 %,	10V	
	C....33	59.22.3221	220u	-20/+50 %,	10V	
	C....34	59.22.3221	220u	-20/+50 %,	10V	
	C....35	59.22.3221	220u	-20/+50 %,	10V	
	C....36	59.22.3221	220u	-20/+50 %,	10V	
	C....37	59.22.3221	220u	-20/+50 %,	10V	
	C....38	59.22.5101	100u	-20/+50 %,	25V	
	C....39	59.22.5101	100u	-20/+50 %,	25V	
	C....40	59.22.3221	220u	-20/+50 %,	10V	
	C....41	59.22.3221	220u	-20/+50 %,	10V	
	C....42	59.22.3221	220u	-20/+50 %,	10V	
	C....43	59.22.3221	220u	-20/+50 %,	10V	
	C....44	59.22.3221	220u	-20/+50 %,	10V	
	C....45	59.06.0104	100n	10 %,	63V	
	C....46	59.06.0104	100n	10 %,	63V	
	C....47	59.05.1681	680p	1 %,	630V	
	C....48	59.05.1681	680p	1 %,	630V	
	C....49	59.32.2681	680p	10 %,	50V	
	C....50	59.32.2681	680p	10 %,	50V	
	C....51	59.05.1681	680p	1 %,	630V	
	C....52	59.05.1681	680p	1 %,	630V	
	C....53	59.32.2681	680p	10 %,	50V	
	C....54	59.32.2681	680p	10 %,	50V	
	C....55	59.05.1681	680p	1 %,	630V	
	C....56	59.05.1681	680p	1 %,	630V	
	C....57	59.32.2681	680p	10 %,	50V	
	C....58	59.32.2681	680p	10 %,	50V	
	C....59	59.05.1681	680p	1 %,	630V	
	C....60	59.05.1681	680p	1 %,	630V	
	C....61	59.32.2681	680p	10 %,	50V	
	C....62	59.32.2681	680p	10 %,	50V	
	C....63	59.05.1681	680p	1 %,	630V	
	C....64	59.05.1681	680p	1 %,	630V	
	C....65	59.32.2681	680p	10 %,	50V	
	C....66	59.32.2681	680p	10 %,	50V	
	C....67	59.05.1681	680p	1 %,	630V	
	C....68	59.05.1681	680p	1 %,	630V	
	C....69	59.32.2681	680p	10 %,	50V	
	C....70	59.32.2681	680p	10 %,	50V	
	C....71	59.06.0104	100n	10 %,	63V	
	IC....1	50.09.0117	MC33078	DIP08, DUAL LOW NOISE AMPLIFIER		
	IC....2	50.09.0117	MC33078	DIP08, DUAL LOW NOISE AMPLIFIER		
	IC....3	50.09.0117	MC33078	DIP08, DUAL LOW NOISE AMPLIFIER		
	IC....4	50.09.0106	5532AN	DIP08, LINEAR OPAMP DUAL		
	IC....5	50.09.0106	5532AN	DIP08, LINEAR OPAMP DUAL		
	IC....6	50.09.0106	5532AN	DIP08, LINEAR OPAMP DUAL		
	IC....7	50.09.0106	5532AN	DIP08, LINEAR OPAMP DUAL		
	IC....8	50.09.0106	5532AN	DIP08, LINEAR OPAMP DUAL		
	IC....9	50.09.0106	5532AN	DIP08, LINEAR OPAMP DUAL		
	J.....1	54.14.5520	20-P	VERT,	FEM., J-MICRO-MATCH	
	J.....2	1.710.350.02	JACK	ANG.,	FEM., JACK CONNECTOR 2*U	
	J.....3	1.710.350.02	JACK	ANG.,	FEM., JACK CONNECTOR 2*U	
	J.....4	1.710.350.02	JACK	ANG.,	FEM., JACK CONNECTOR 2*U	
	J.....5	1.710.350.02	JACK	ANG.,	FEM., JACK CONNECTOR 2*U	
	J.....6	1.710.350.02	JACK	ANG.,	FEM., JACK CONNECTOR 2*U	
	J.....7	1.710.350.02	JACK	ANG.,	FEM., JACK CONNECTOR 2*U	
	J.....8	1.710.350.02	JACK	ANG.,	FEM., JACK CONNECTOR 2*U	
	J.....9	1.710.350.02	JACK	ANG.,	FEM., JACK CONNECTOR 2*U	
	J....10	1.710.350.02	JACK	ANG.,	FEM., JACK CONNECTOR 2*U	
	J....11	1.710.350.02	JACK	ANG.,	FEM., JACK CONNECTOR 2*U	
	J....12	1.710.350.02	JACK	ANG.,	FEM., JACK CONNECTOR 2*U	
	J....13	1.710.350.02	JACK	ANG.,	FEM., JACK CONNECTOR 2*U	
	MP....1	1.775.900.11	Insert Unit PCB			
	MP....2	1.726.780.01	Print Holder			
	MP....3	28.21.1450	Tubular-rivet ,D 3.1*4.0			
	R.....1	57.11.3302	3k	1 %,	0.6W,	MF
	R.....2	57.11.3302	3k	1 %,	0.6W,	MF
	R.....3	57.11.3302	3k	1 %,	0.6W,	MF
	R.....4	57.11.3302	3k	1 %,	0.6W,	MF
	R.....5	57.11.3302	3k	1 %,	0.6W,	MF
	R.....6	57.11.3302	3k	1 %,	0.6W,	MF
	R.....7	57.11.3302	3k	1 %,	0.6W,	MF
	R.....8	57.11.3302	3k	1 %,	0.6W,	MF
	R.....9	57.11.3474	470k	1 %,	0.6W,	MF
	R....10	57.11.3302	3k	1 %,	0.6W,	MF
	R....11	57.11.3474	470k	1 %,	0.6W,	MF
	R....12	57.11.3302	3k	1 %,	0.6W,	MF
	R....13	57.11.3474	470k	1 %,	0.6W,	MF
	R....14	57.11.3302	3k	1 %,	0.6W,	MF
	R....15	57.11.3474	470k	1 %,	0.6W,	MF
	R....16	57.11.3302	3k	1 %,	0.6W,	MF
	R....17	57.11.3474	470k	1 %,	0.6W,	MF
	R....18	57.11.3302	3k	1 %,	0.6W,	MF
	R....19	57.11.3474	470k	1 %,	0.6W,	MF
	R....20	57.11.3302	3k	1 %,	0.6W,	MF
	R....21	57.11.3302	3k	1 %,	0.6W,	MF
	R....22	57.11.3302	3k	1 %,	0.6W,	MF
	R....23	57.11.3302	3k	1 %,	0.6W,	MF
	R....24	57.11.3302	3k	1 %,	0.6W,	MF
	R....25	57.11.3302	3k	1 %,	0.6W,	MF
	R....26	57.11.3474	470k	1 %,	0.6W,	MF
	R....27	57.11.3474	470k	1 %,	0.6W,	MF
	R....28	57.11.3302	3k	1 %,	0.6W,	MF
	R....29	57.11.3302	3k	1 %,	0.6W,	MF
	R....30	57.11.3474	470k	1 %,	0.6W,	MF
	R....31	57.11.3302	3k	1 %,	0.6W,	MF
	R....32	57.11.3474	470k	1 %,	0.6W,	MF
	R....33	57.11.3302	3k	1 %,	0.6W,	MF
	R....34	57.11.3474	470k	1 %,	0.6W,	MF
	R....35	57.11.3302	3k	1 %,	0.6W,	MF
	R....36	57.11.3474	470k	1 %,	0.6W,	MF
	R....37	57.11.3302	3k	1 %,	0.6W,	MF
	R....38	57.11.3302	3k	1 %,	0.6W,	MF
	R....39	57.11.3302	3k	1 %,	0.6W,	MF
	R....40	57.11.3302	3k	1 %,	0.6W,	MF
	R....41	57.11.3302	3k	1 %,	0.6W,	MF
	R....42	57.11.3302	3k	1 %,	0.6W,	MF
	R....43	57.11.3302	3k	1 %,	0.6W,	MF
	R....44	57.11.3302	3k	1 %,	0.6W,	MF
	R....45	57.11.3302	3k	1 %,	0.6W,	MF
	R....46	57.11.3302	3k	1 %,	0.6W,	MF
	R....47	57.11.3302	3k	1 %,	0.6W,	MF
	R....48	57.11.3302	3k	1 %,	0.6W,	MF
	R....49	57.11.3474	470k	1 %,	0.6W,	MF
	R....50	57.11.3302	3k	1 %,	0.6W,	MF
	R....51	57.11.3272	2k7	1 %,	0.6W,	MF
	R....52	57.11.3302	3k	1 %,	0.6W,	MF
	R....53	57.11.3474	470k	1 %,	0.6W,	MF
	R....54	57.11.3474	470k	1 %,	0.6W,	MF
	R....55	57.11.3302	3k	1 %,	0.6W,	MF
	R....56	57.11.3272	2k7	1 %,	0.6W,	MF
	R....57	57.11.3302	3k	1 %,	0.6W,	MF
	R....58	57.11.3474	470k	1 %,	0.6W,	MF
	R....59	57.11.3474	470k	1 %,	0.6W,	MF
	R....60	57.11.3302	3k	1 %,	0.6W,	MF
	R....61	57.11.3272	2k7	1 %,	0.6W,	MF
	R....62	57.11.3302	3k	1 %,	0.6W,	MF
	R....63	57.11.3474	470k	1 %,	0.6W,	MF
	R....64	57.11.3474	470k	1 %,	0.6W,	MF
	R....65	57.11.3302	3k	1 %,	0.6W,	MF
	R....66	57.11.3272	2k7	1 %,	0.6W,	MF
	R....67	57.11.3302	3k	1 %,	0.6W,	MF
	R....68	57.11.3474	470k	1 %,	0.6W,	MF
	R....69	57.11.3474	470k	1 %,	0.6W,	MF
	R....70	57.11.3302	3k	1 %,	0.6W,	MF
	R....71	57.11.3272	2k7	1 %,	0.6W,	MF
	R....72	57.11.3302	3k	1 %,	0.6W,	MF
	R....73	57.11.3474	470k	1 %,	0.6W,	MF
	R....74	57.11.3474	470k	1 %,	0.6W,	MF
	R....75	57.11.3302	3k	1 %,	0.6W,	MF
	R....76	57.92.7012	0.3A	60V,	R-PTC	
	R....77	57.92.7012	0.3A	60V,	R-PTC	
	R....78	57.11.3272	2k7	1 %,	0.6W,	MF
	R....79	57.11.3302	3k	1 %,	0.6W,	MF
	R....80	57.11.3474	470k	1 %,	0.6W,	MF
	R....81	57.11.3272	2k7	1 %,	0.6W,	MF
	R....82	57.11.3272	2k7	1 %,	0.6W,	MF
	R....83	57.11.3272	2k7	1 %,	0.6W,	MF
	R....84	57.11.3272	2k7	1 %,	0.6W,	MF
	R....85	57.11.3272	2k7	1 %,	0.6W,	MF
	R....86	57.11.3272	2k7	1 %,	0.6W,	MF
	R....87	57.11.3392	3k9	1 %,	0.6W,	MF
	R....88	57.11.3392	3k9	1 %,	0.6W,	MF
	R....89	57.11.3392	3k9	1 %,	0.6W,	MF
	R....90	57.11.3392	3k9	1 %,	0.6W,	MF

1.775.900.00 INSERT UNIT (CONT.)

Ad	..Pos..	...Ref.No...	Description			
	R....91	57.11.3392	3k9	1 %,	0.6W,	MF
	R....92	57.11.3392	3k9	1 %,	0.6W,	MF
	R....93	57.11.3392	3k9	1 %,	0.6W,	MF
	R....94	57.11.3392	3k9	1 %,	0.6W,	MF
	R....95	57.11.3392	3k9	1 %,	0.6W,	MF
	R....96	57.11.3392	3k9	1 %,	0.6W,	MF
	R....97	57.11.3392	3k9	1 %,	0.6W,	MF
	R....98	57.11.3392	3k9	1 %,	0.6W,	MF
	R....99	57.11.3150	15E	1 %,	0.6W,	MF
	R...100	57.11.3150	15E	1 %,	0.6W,	MF
	R...101	57.11.3150	15E	1 %,	0.6W,	MF
	R...102	57.11.3150	15E	1 %,	0.6W,	MF
	R...103	57.11.3150	15E	1 %,	0.6W,	MF
	R...104	57.11.3150	15E	1 %,	0.6W,	MF
	R...105	57.11.3150	15E	1 %,	0.6W,	MF
	R...106	57.11.3150	15E	1 %,	0.6W,	MF
	R...107	57.11.3150	15E	1 %,	0.6W,	MF
	R...108	57.11.3150	15E	1 %,	0.6W,	MF
	R...109	57.11.3150	15E	1 %,	0.6W,	MF
	R...110	57.11.3150	15E	1 %,	0.6W,	MF
	R...111	57.11.3302	3k	1 %,	0.6W,	MF
	R...112	57.11.3302	3k	1 %,	0.6W,	MF
	R...113	57.11.3302	3k	1 %,	0.6W,	MF
	R...114	57.11.3302	3k	1 %,	0.6W,	MF
	R...115	57.11.3302	3k	1 %,	0.6W,	MF
	R...116	57.11.3302	3k	1 %,	0.6W,	MF
	R...117	57.11.3302	3k	1 %,	0.6W,	MF
	R...118	57.11.3302	3k	1 %,	0.6W,	MF
	R...119	57.11.3302	3k	1 %,	0.6W,	MF
	R...120	57.11.3302	3k	1 %,	0.6W,	MF
	R...121	57.11.3302	3k	1 %,	0.6W,	MF
	R...122	57.11.3302	3k	1 %,	0.6W,	MF
	R...123	57.11.3302	3k	1 %,	0.6W,	MF
	R...124	57.11.3302	3k	1 %,	0.6W,	MF
	R...125	57.11.3302	3k	1 %,	0.6W,	MF
	R...126	57.11.3302	3k	1 %,	0.6W,	MF
	R...127	57.11.3302	3k	1 %,	0.6W,	MF
	R...128	57.11.3302	3k	1 %,	0.6W,	MF
	R...129	57.11.3302	3k	1 %,	0.6W,	MF
	R...130	57.11.3302	3k	1 %,	0.6W,	MF
	R...131	57.11.3302	3k	1 %,	0.6W,	MF
	R...132	57.11.3302	3k	1 %,	0.6W,	MF
	R...133	57.11.3302	3k	1 %,	0.6W,	MF
	R...134	57.11.3302	3k	1 %,	0.6W,	MF
	R...135	57.11.3302	3k	1 %,	0.6W,	MF
	R...136	57.11.3302	3k	1 %,	0.6W,	MF
	R...137	57.11.3302	3k	1 %,	0.6W,	MF
	R...138	57.11.3302	3k	1 %,	0.6W,	MF
	R...139	57.11.3302	3k	1 %,	0.6W,	MF
	R...140	57.11.3302	3k	1 %,	0.6W,	MF
	R...141	57.11.3302	3k	1 %,	0.6W,	MF
	R...142	57.11.3302	3k	1 %,	0.6W,	MF
	R...143	57.11.3302	3k	1 %,	0.6W,	MF
	R...144	57.11.3302	3k	1 %,	0.6W,	MF
	R...145	57.11.3302	3k	1 %,	0.6W,	MF
	R...146	57.11.3302	3k	1 %,	0.6W,	MF
	R...147	57.11.3302	3k	1 %,	0.6W,	MF
	R...148	57.11.3302	3k	1 %,	0.6W,	MF
	R...149	57.11.3302	3k	1 %,	0.6W,	MF
	R...150	57.11.3302	3k	1 %,	0.6W,	MF
	R...151	57.11.3302	3k	1 %,	0.6W,	MF
	R...152	57.11.3302	3k	1 %,	0.6W,	MF
	R...153	57.11.3152	1k5	1 %,	0.6W,	MF
	R...154	57.11.3152	1k5	1 %,	0.6W,	MF
	R...155	57.11.3302	3k	1 %,	0.6W,	MF
	R...156	57.11.3689	6E8	1 %,	0.6W,	MF
	R...157	57.11.3689	6E8	1 %,	0.6W,	MF
	R...158	57.11.3152	1k5	1 %,	0.6W,	MF
	R...159	57.11.3152	1k5	1 %,	0.6W,	MF
	R...160	57.11.3302	3k	1 %,	0.6W,	MF
	R...161	57.11.3689	6E8	1 %,	0.6W,	MF
	R...162	57.11.3689	6E8	1 %,	0.6W,	MF
	R...163	57.11.3152	1k5	1 %,	0.6W,	MF
	R...164	57.11.3152	1k5	1 %,	0.6W,	MF
	R...165	57.11.3302	3k	1 %,	0.6W,	MF
	R...166	57.11.3689	6E8	1 %,	0.6W,	MF
	R...167	57.11.3689	6E8	1 %,	0.6W,	MF
	R...168	57.11.3152	1k5	1 %,	0.6W,	MF
	R...169	57.11.3152	1k5	1 %,	0.6W,	MF
	R...170	57.11.3302	3k	1 %,	0.6W,	MF
	R...171	57.11.3689	6E8	1 %,	0.6W,	MF
	R...172	57.11.3689	6E8	1 %,	0.6W,	MF
	R...173	57.11.3152	1k5	1 %,	0.6W,	MF
	R...174	57.11.3152	1k5	1 %,	0.6W,	MF
	R...175	57.11.3302	3k	1 %,	0.6W,	MF
	R...176	57.11.3689	6E8	1 %,	0.6W,	MF
	R...177	57.11.3689	6E8	1 %,	0.6W,	MF
	R...178	57.11.3152	1k5	1 %,	0.6W,	MF
	R...179	57.11.3152	1k5	1 %,	0.6W,	MF
	R...180	57.11.3302	3k	1 %,	0.6W,	MF
	R...181	57.11.3689	6E8	1 %,	0.6W,	MF
	R...182	57.11.3689	6E8	1 %,	0.6W,	MF

00 KG 91/08/28

EL=Electrolytic,C=Ceramic, PETP=Polyester

MF=Metal Film

MANUFACTURER: dbx=dbx Incorparated,NS=National Semiconductor,Mot=Motorola
RA=Raytheon,SIG=Signetics,TI=Texas Instruments

END

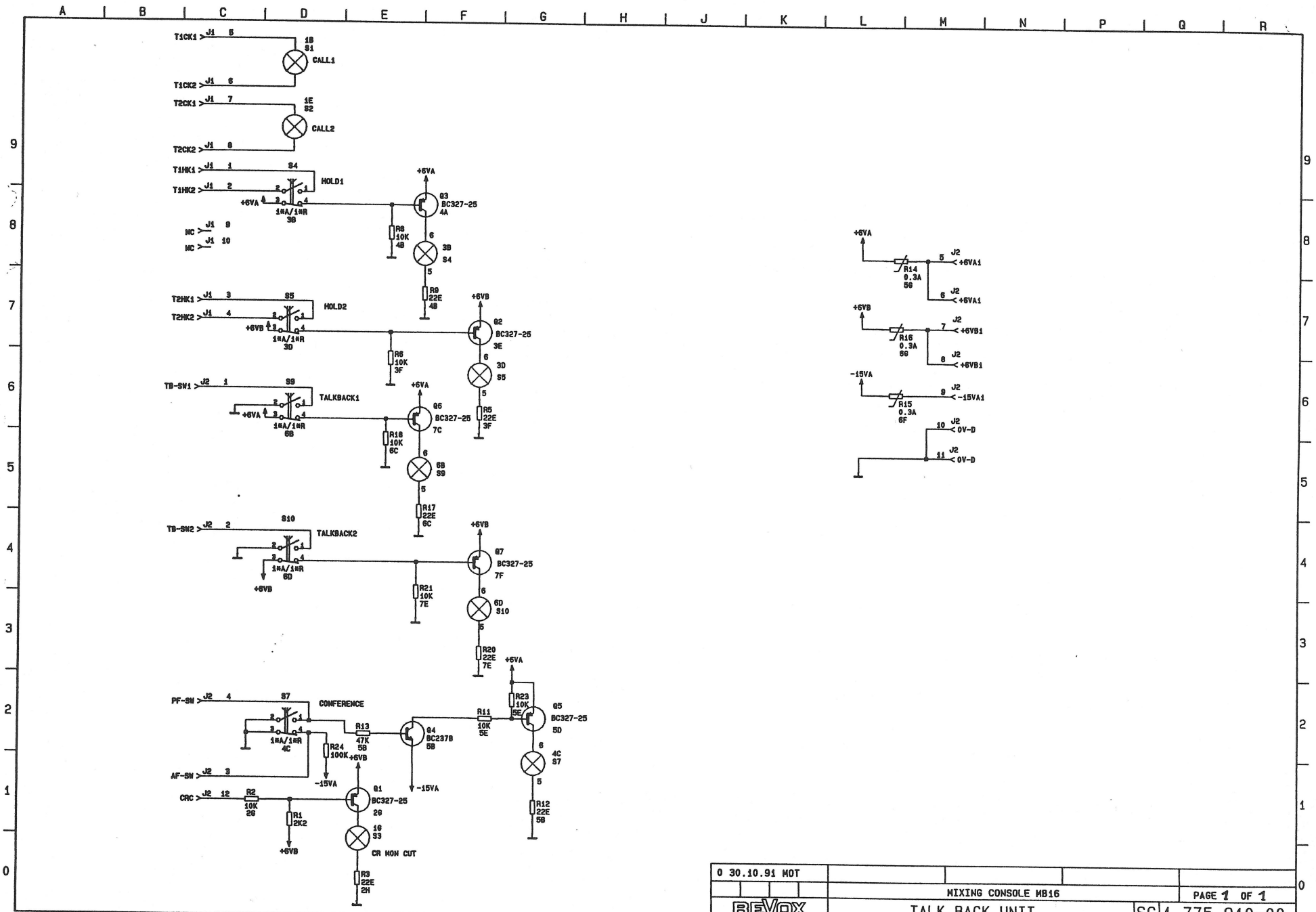

0 30.10.91 MOT			
REVOX	MIXING CONSOLE MB16		PAGE 1 OF 1
	TALK BACK UNIT	SC	1.775.910-00

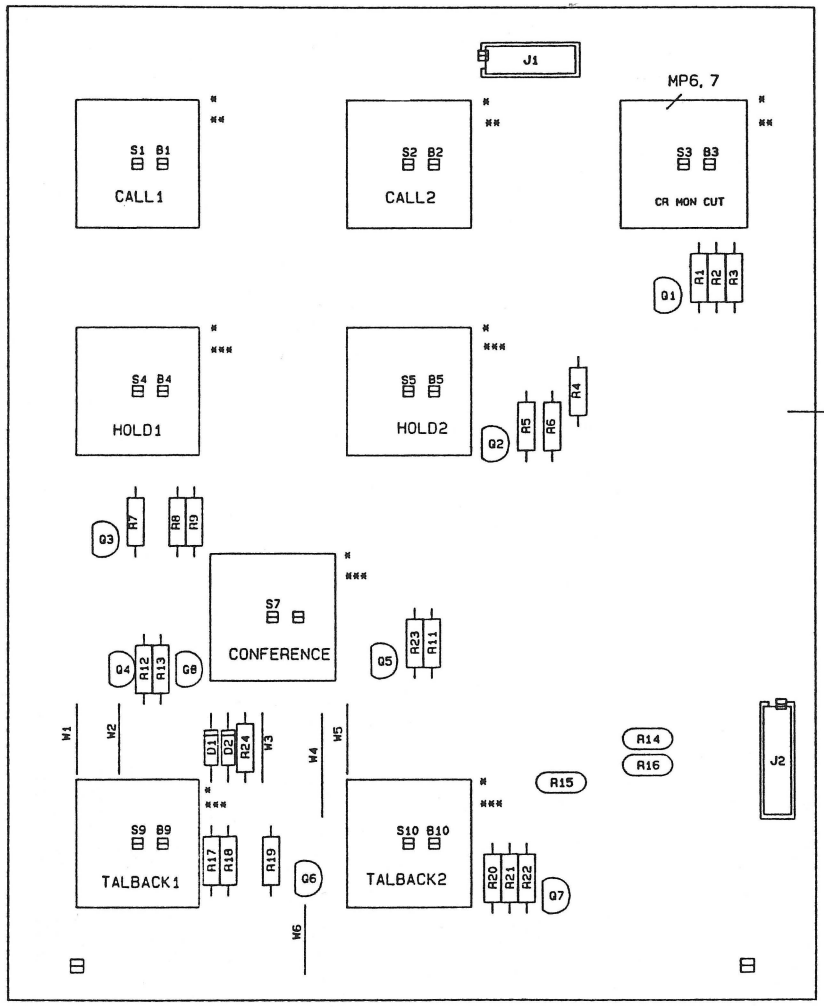

* MP1, 2 (8X)
** MP3 (3X)
*** MP4 (5X)

NR. ETIKETTE / ESE WARNSCHILD
AUFGEKLEBT NACH FABRIKATIONSMUSTER

0 28.08.91 MOT			PAGE BP OF
REVOX	TALK BACK UNIT	BP	1.775.910-00

1.775.910.00 TALK BACK UNIT

Ad	..Pos..	...Ref.No...	Description	
	B.....1	51.02.0158	LAMP	Bi-Pin,24V,25mA
	B.....2	51.02.0158	LAMP	Bi-Pin,24V,25mA
	B.....3	51.02.0154	LAMP	Bi-Pin, 5V,40mA
	B.....4	51.02.0154	LAMP	Bi-Pin, 5V,40mA
	B.....5	51.02.0154	LAMP	Bi-Pin, 5V,40mA
	B.....6	51.02.0154	LAMP	Bi-Pin, 5V,40mA
	B.....7	51.02.0154	LAMP	Bi-Pin, 5V,40mA
	B.....8	51.02.0154	LAMP	Bi-Pin, 5V,40mA
	D.....1	50.04.0523	BAT81	DO35, SCHOTTKY
01	D.....1	. .		Not Used
	D.....2	50.04.0523	BAT81	DO35, SCHOTTKY
01	D.....2	. .		Not Used
	J.....1	54.14.5510	10-P	VERT, FEM., J-MICRO-MATCH
	J.....2	54.14.5512	12-P	VERT, FEM., J-MICRO-MATCH
	MP....1	55.15.0228	8 pcs	Push-button knob
	MP....2	55.15.0221	8 pcs	Push-button assembly, white
	MP....3	55.15.0206	3 pcs	Push-button assembly
	MP....4	55.15.0205	5 pcs	Push-button assembly, concave
	MP....5	1.775.910.11		Talk back Unit PCB
01	MP....5	1.775.910.12		Talk back Unit PCB
	MP....6	1.775.910.01		Foil ,CR MON CUT
	MP....7	55.15.0212	3 pcs	Push-button assembly,red
	Q.....1	50.03.0351	BC327-25	PNP, TO92-1
	Q.....2	50.03.0351	BC327-25	PNP, TO92-1
	Q.....3	50.03.0351	BC327-25	PNP, TO92-1
	Q.....4	50.03.0436	BC237B	NPN, TO92-1
	Q.....5	50.03.0351	BC327-25	PNP, TO92-1
	Q.....6	50.03.0351	BC327-25	PNP, TO92-1
	Q.....7	50.03.0351	BC327-25	PNP, TO92-1
	Q.....8	50.03.0351	BC327-25	PNP, TO92-1
01	Q.....8	. .		Not Used
	R.....1	57.11.3103	10k	1 %, 0.6W, MF
01	R.....1	57.11.3222	2.2k	1 %, 0.6W, MF
	R.....2	57.11.3103	10k	1 %, 0.6W, MF
	R.....3	57.11.3220	22E	1 %, 0.6W, MF
	R.....4	57.11.3103	10k	1 %, 0.6W, MF
	R.....5	57.11.3220	22E	1 %, 0.6W, MF
	R.....6	57.11.3103	10k	1 %, 0.6W, MF
	R.....7	57.11.3103	10k	1 %, 0.6W, MF
	R.....8	57.11.3103	10k	1 %, 0.6W, MF
	R.....9	57.11.3220	22E	1 %, 0.6W, MF
	R....11	57.11.3103	10k	1 %, 0.6W, MF
	R....12	57.11.3220	22E	1 %, 0.6W, MF
	R....13	57.11.3473	47k	1 %, 0.6W, MF
	R....14	57.92.7012	0.3A	60V, R-PTC
	R....15	57.92.7012	0.3A	60V, R-PTC
	R....16	57.92.7012	0.3A	60V, R-PTC
	R....17	57.11.3220	22E	1 %, 0.6W, MF
	R....18	57.11.3103	10k	1 %, 0.6W, MF
	R....19	57.11.3103	10k	1 %, 0.6W, MF
	R....20	57.11.3220	22E	1 %, 0.6W, MF
	R....21	57.11.3103	10k	1 %, 0.6W, MF
	R....22	57.11.3103	10k	1 %, 0.6W, MF
	R....23	57.11.3103	10k	1 %, 0.6W, MF
	R....24	57.11.3104	100k	1 %, 0.6W, MF
	S.....1	55.15.0249		EAO-Lamp
	S.....2	55.15.0249		EAO-Lamp
	S.....3	55.15.0249		EAO-Lamp
	S.....4	55.15.0239	1*A/1*R	EAO-KEY-SWITCH 12.- - Fr.
	S.....5	55.15.0239	1*A/1*R	EAO-KEY-SWITCH
	S.....6	55.15.0239	1*A/1*R	EAO-KEY-SWITCH
	S.....7	55.15.0239	1*A/1*R	EAO-KEY-SWITCH
	S.....8	55.15.0239	1*A/1*R	EAO-KEY-SWITCH
	W.....1	64.01.0106	10.60mm	0.60MM, WIRE BRIDGE
	W.....2	64.01.0106	10.60mm	0.60MM, WIRE BRIDGE
	W.....3	64.01.0106	10.60mm	0.60MM, WIRE BRIDGE
	W.....4	64.01.0106	15.24mm	0.60MM, WIRE BRIDGE
	W.....5	64.01.0106	10.60mm	0.60MM, WIRE BRIDGE
	W.....6	64.01.0106	10.60mm	0.60MM, WIRE BRIDGE

00 KG 91/08/28
01 UL 91/11/04

EL=Electrolytic,C=Ceramic, PETP=Polyester

MF=Metal Film .

MANUFACTURER: dbx=dbx Incorparated,NS=National Semiconductor,Mot=Motorola
RA=Raytheon,SIG=Signetics,TI=Texas Instruments

END

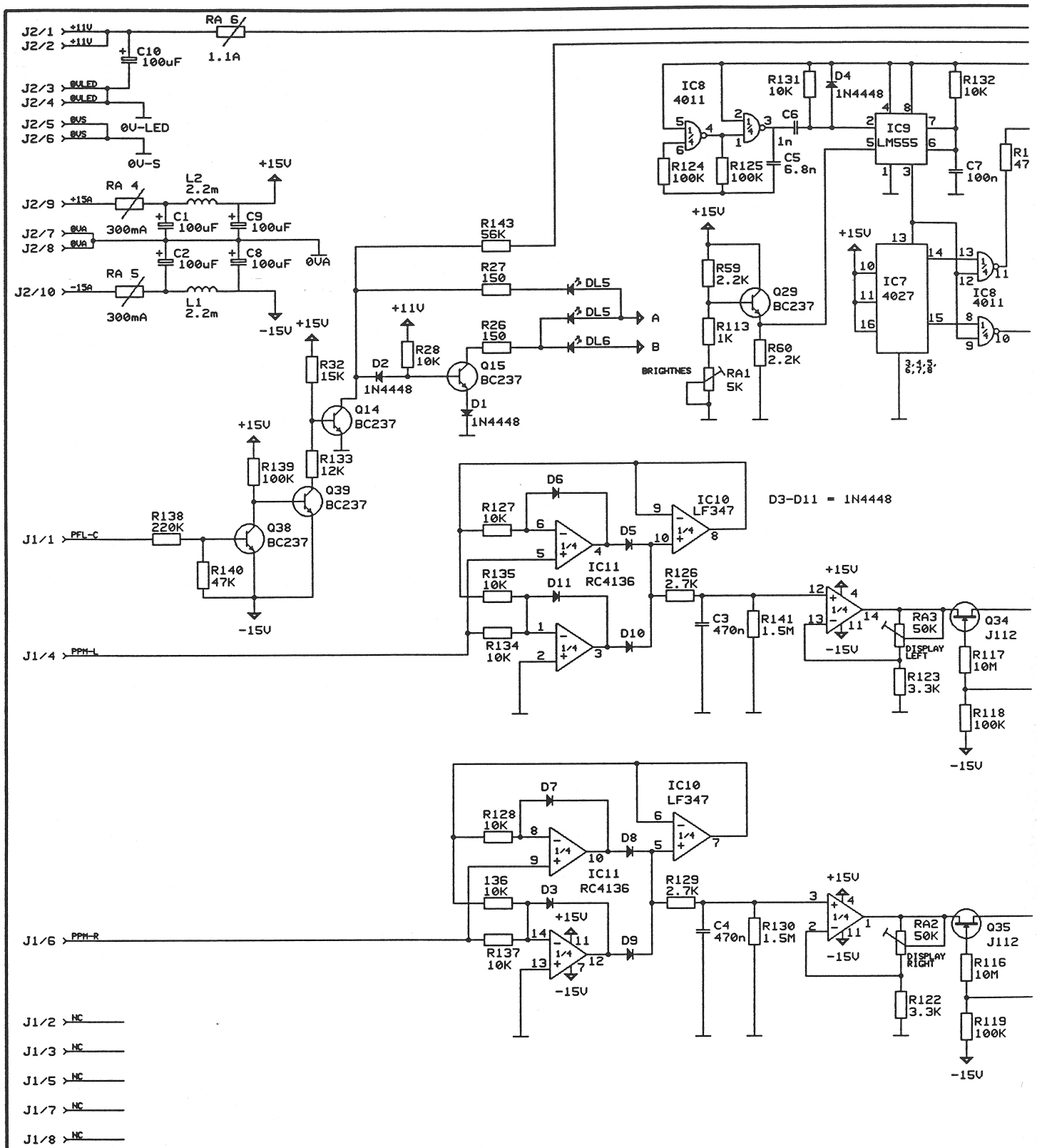
J2/1 +11V
J2/2 +11V
C10 100uF
RA 6
1.1A
J2/3 0VLED
J2/4 0VLED
J2/5 0VS
J2/6 0VS
0V-LED
0V-S
J2/9 +15A
RA 4
300mA
L2 2.2m
C1 100uF
C9 100uF
J2/7 0VA
J2/8 0VA
C2 100uF
C8 100uF
0VA
J2/10 -15A
RA 5
300mA
L1 2.2m
-15V
+15V
R143 56K
R27 150
DL5
DL5
DL6
A
B
+11V
R28 10K
D2 1N4448
R26 150
Q15 BC237
D1 1N4448
R32 15K
Q14 BC237
R133 12K
R139 100K
Q39 BC237
R138 220K
Q38 BC237
R140 47K
J1/1 PFL-C
J1/4 PPM-L
IC8 4011
R131 10K
D4 1N4448
C6 1n
C5 6.8n
R124 100K
R125 100K
IC9 LM555
R132 10K
C7 100n
R59 2.2K
Q29 BC237
R113 1K
R60 2.2K
BRIGHTNES
RA1 5K
IC7 4027
IC8 4011
D3-D11 = 1N4448
D6
R127 10K
IC10 LF347
D5
IC11 RC4136
R135 10K
D11
R134 10K
D10
R126 2.7K
C3 470n
R141 1.5M
RA3 50K
DISPLAY LEFT
R123 3.3K
Q34 J112
R117 10M
R118 100K
D7
R128 10K
D8
136 10K
D3
R137 10K
D9
R129 2.7K
C4 470n
R130 1.5M
RA2 50K
DISPLAY RIGHT
R122 3.3K
Q35 J112
R116 10M
R119 100K
J1/6 PPM-R
J1/2 NC
J1/3 NC
J1/5 NC
J1/7 NC
J1/8 NC

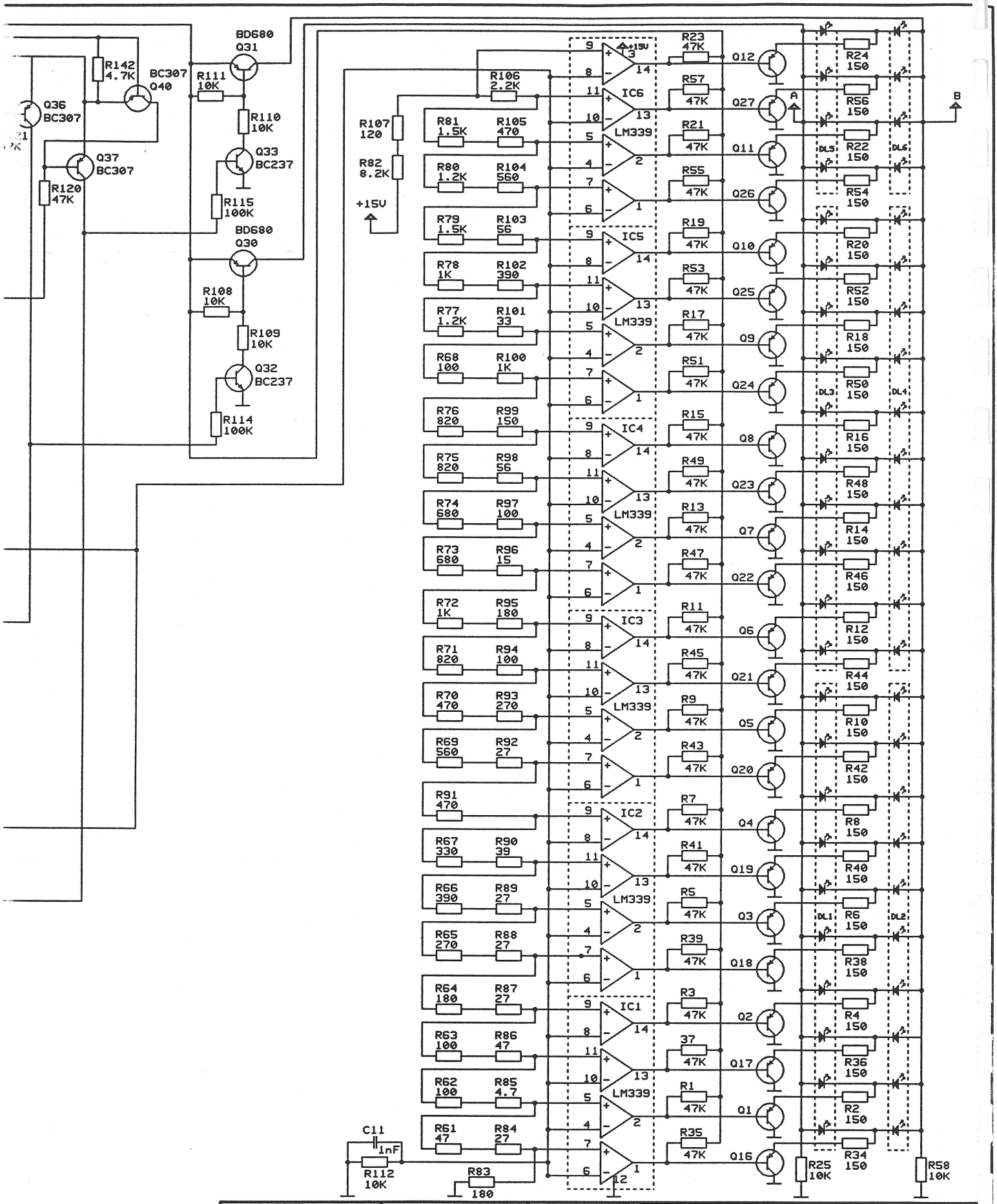

⓪ AUG-19-91 RS	○ SEP-12-91 UL	○	○	○
	MIXING CONSOLE MB16			PAGE OF 1
REVOX	DISPLAY UNIT		SC	1.775.920.00

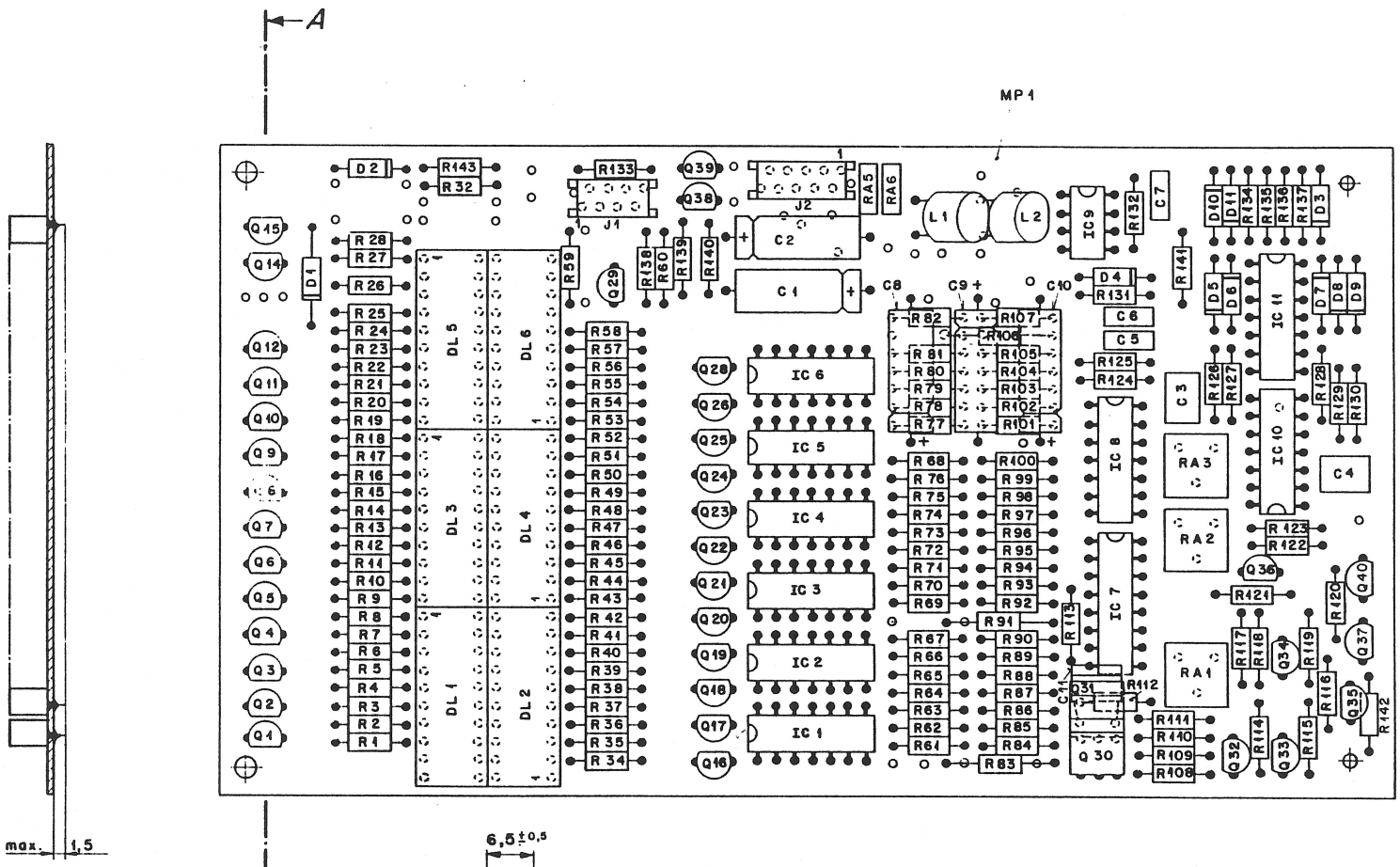

Warnschild - ESE und Nr. Etikette
nach Fabr. Muster aufgeklebt.

Werkstoff: Norm-Nr.: / DIN-Bez.: / Abmessung:	Oberfläche: Güte: / Beh.:			Änderung			
Zugehörige Unterlagen: PL, LL	Freimasstoleranz: ±	Maßstab: 2:1		Ausgabe	3.9.91	A.Ho	0
Ersatz für:	Ersetzt durch:			Datum	Gez.	Gepr.	Ges.	Index
Kopie für:							

STUDER REGENSDORF ZÜRICH

Benennung: DISPLAY UNIT LED ESE

Nummer: 1.775.920-00

1.775.920.00 DISPLAY UNIT LED ''ESE''

Ad	..Pos..	...Ref.No...	Description		
	C.....1	59.25.4101	100 uF	-20%, 25V, EL	
	C.....2	59.25.4101	100 uF	-20%, 25V, EL	
	C.....3	59.06.0474	0.47uF	10%, 25V, PETP	
	C.....4	59.06.0474	0.47uF	10%, 25V, PETP	
	C.....5	59.06.0682	6.8 nF	10%, 25V, PETP	
	C.....6	59.06.0102	1 nF	10%, 25V, PETP	
	C.....7	59.06.0104	100 nF	10%, 25V, PETP	
	C.....8	59.25.4101	100 uF	-20%, 25V, EL	
	C.....9	59.25.4101	100 uF	-20%, 25V, EL	
	C....10	59.25.4101	100 uF	-20%, 25V, EL	
	C....11	59.32.4102	1 nF	20%, 25V, CER	
	D.....1	50.04.0125	1N 4448	any	
	D.....2	50.04.0125	1N 4448	any	
	D.....3	50.04.0125	1N 4448	any	
	D.....4	50.04.0125	1N 4448	any	
	D.....5	50.04.0125	1N 4448	any	
	D.....6	50.04.0125	1N 4448	any	
	D.....7	50.04.0125	1N 4448	any	
	D.....8	50.04.0125	1N 4448	any	
	D.....9	50.04.0125	1N 4448	any	
	D....10	50.04.0125	1N 4448	any	
	D....11	50.04.0125	1N 4448	any	
	DL....1	50.04.2161	gn/dif	BAR-GRAPH	
	DL....2	50.04.2161	gn/dif	BAR-GRAPH	
	DL....3	50.04.2161	gn/dif	BAR-GRAPH	
	DL....4	50.04.2161	gn/dif	BAR-GRAPH	
	DL....5	50.04.2150	rt/dif	BAR-GRAPH	
	DL....6	50.04.2150	rt/dif	BAR-GRAPH	
	IC....1	50.11.0104	LM339		NS
	IC....2	50.11.0104	LM339		NS
	IC....3	50.11.0104	LM339		NS
	IC....4	50.11.0104	LM339		NS
	IC....5	50.11.0104	LM339		NS
	IC....6	50.11.0104	LM339		NS
	IC....7	50.07.0027	4027		
	IC....8	50.07.1011	4011		
	IC....9	50.05.0158	LM555		NS
	IC...10	50.09.0104	LF347N		NS
	IC...11	50.05.0232	RC4136		TI
	J.....1	54.14.5508	8 POLE	MICRO-MATCH	
	J.....2	54.14.5510	10 POLE	MICRO-MATCH	
	L.....1	62.02.3222	2.2mH		
	L.....2	62.02.3222	2.2mH		
	MP....1	1.775.920.11		DISPLAY PCB	
	Q.....1	50.03.0515	BC 307	PNP	Mot
	Q.....2	50.03.0515	BC 307	PNP	Mot
	Q.....3	50.03.0515	BC 307	PNP	Mot
	Q.....4	50.03.0515	BC 307	PNP	Mot
	Q.....5	50.03.0515	BC 307	PNP	Mot
	Q.....6	50.03.0515	BC 307	PNP	Mot
	Q.....7	50.03.0515	BC 307	PNP	Mot
	Q.....8	50.03.0515	BC 307	PNP	Mot
	Q.....9	50.03.0515	BC 307	PNP	Mot
	Q....10	50.03.0515	BC 307	PNP	Mot
	Q....11	50.03.0515	BC 307	PNP	Mot
	Q....12	50.03.0515	BC 307	PNP	Mot
	Q....14	50.03.0436	BC 237	NPN	Mot
	Q....15	50.03.0436	BC 237	NPN	Mot
	Q....16	50.03.0515	BC 307	PNP	Mot
	Q....17	50.03.0515	BC 307	PNP	Mot
	Q....18	50.03.0515	BC 307	PNP	Mot
	Q....19	50.03.0515	BC 307	PNP	Mot
	Q....20	50.03.0515	BC 307	PNP	Mot
	Q....21	50.03.0515	BC 307	PNP	Mot
	Q....22	50.03.0515	BC 307	PNP	Mot
	Q....23	50.03.0515	BC 307	PNP	Mot
	Q....24	50.03.0515	BC 307	PNP	Mot
	Q....25	50.03.0515	BC 307	PNP	Mot
	Q....26	50.03.0515	BC 307	PNP	Mot
	Q....28	50.03.0515	BC 307	PNP	Mot
	Q....29	50.03.0436	BC 237	NPN	Mot
	Q....30	50.03.0505	BD 680	PNP	Mot
	Q....31	50.03.0505	BD 680	PNP	Mot
	Q....32	50.03.0436	BC 237	NPN	Mot
	Q....33	50.03.0436	BC 237	NPN	Mot
	Q....34	50.03.0350	J 112	FET	Mot
	Q....35	50.03.0350	J 112	FET	Mot
	Q....36	50.03.0515	BC 307	PNP	Mot
	Q....37	50.03.0515	BC 307	PNP	Mot
	Q....38	50.03.0436	BC 237	NPN	Mot
	Q....39	50.03.0436	BC 237	NPN	Mot
	Q....40	50.03.0515	BC 307	PNP	Mot
	R.....1	57.11.3473	47 KOhm	1%, 0.25W, MF	
	R.....2	57.11.3151	150 Ohm	1%, 0.25W, MF	
	R.....3	57.11.3473	47 KOhm	1%, 0.25W, MF	
	R.....4	57.11.3151	150 Ohm	1%, 0.25W, MF	
	R.....5	57.11.3473	47 KOhm	1%, 0.25W, MF	
	R.....6	57.11.3151	150 Ohm	1%, 0.25W, MF	
	R.....7	57.11.3473	47 KOhm	1%, 0.25W, MF	
	R.....8	57.11.3151	150 Ohm	1%, 0.25W, MF	
	R.....9	57.11.3473	47 KOhm	1%, 0.25W, MF	
	R....10	57.11.3151	150 Ohm	1%, 0.25W, MF	
	R....11	57.11.3473	47 KOhm	1%, 0.25W, MF	
	R....12	57.11.3151	150 Ohm	1%, 0.25W, MF	
	R....13	57.11.3473	47 KOhm	1%, 0.25W, MF	
	R....14	57.11.3151	150 Ohm	1%, 0.25W, MF	
	R....15	57.11.3473	47 KOhm	1%, 0.25W, MF	
	R....16	57.11.3151	150 Ohm	1%, 0.25W, MF	
	R....17	57.11.3473	47 KOhm	1%, 0.25W, MF	
	R....18	57.11.3151	150 Ohm	1%, 0.25W, MF	
	R....19	57.11.3473	47 KOhm	1%, 0.25W, MF	
	R....20	57.11.3151	150 Ohm	1%, 0.25W, MF	
	R....21	57.11.3473	47 KOhm	1%, 0.25W, MF	
	R....22	57.11.3151	150 Ohm	1%, 0.25W, MF	
	R....23	57.11.3473	47 KOhm	1%, 0.25W, MF	
	R....24	57.11.3151	150 Ohm	1%, 0.25W, MF	
	R....25	57.11.3103	10 KOhm	1%, 0.25W, MF	
	R....26	57.11.3151	150 Ohm	1%, 0.25W, MF	
	R....27	57.11.3151	150 Ohm	1%, 0.25W, MF	
	R....28	57.11.3103	10 KOhm	1%, 0.25W, MF	
	R....32	57.11.3153	15 KOhm	1%, 0.25W, MF	
	R....34	57.11.3151	150 Ohm	1%, 0.25W, MF	
	R....35	57.11.3473	47 KOhm	1%, 0.25W, MF	
	R....36	57.11.3151	150 Ohm	1%, 0.25W, MF	
	R....37	57.11.3473	47 KOhm	1%, 0.25W, MF	
	R....38	57.11.3151	150 Ohm	1%, 0.25W, MF	
	R....39	57.11.3473	47 KOhm	1%, 0.25W, MF	
	R....40	57.11.3151	150 Ohm	1%, 0.25W, MF	
	R....41	57.11.3473	47 KOhm	1%, 0.25W, MF	
	R....42	57.11.3151	150 Ohm	1%, 0.25W, MF	
	R....43	57.11.3473	47 KOhm	1%, 0.25W, MF	
	R....44	57.11.3151	150 Ohm	1%, 0.25W, MF	
	R....45	57.11.3473	47 KOhm	1%, 0.25W, MF	
	R....46	57.11.3151	150 Ohm	1%, 0.25W, MF	
	R....47	57.11.3473	47 KOhm	1%, 0.25W, MF	
	R....48	57.11.3151	150 Ohm	1%, 0.25W, MF	
	R....49	57.11.3473	47 KOhm	1%, 0.25W, MF	
	R....50	57.11.3151	150 Ohm	1%, 0.25W, MF	
	R....51	57.11.3473	47 KOhm	1%, 0.25W, MF	
	R....52	57.11.3151	150 Ohm	1%, 0.25W, MF	
	R....53	57.11.3473	47 KOhm	1%, 0.25W, MF	
	R....54	57.11.3151	150 Ohm	1%, 0.25W, MF	
	R....55	57.11.3473	47 KOhm	1%, 0.25W, MF	
	R....56	57.11.3151	150 Ohm	1%, 0.25W, MF	
	R....57	57.11.3473	47 KOhm	1%, 0.25W, MF	
	R....58	57.11.3103	10 KOhm	1%, 0.25W, MF	
	R....59	57.11.3222	2.2 KOhm	1%, 0.25W, MF	
	R....60	57.11.3222	2.2 KOhm	1%, 0.25W, MF	
	R....61	57.11.3470	47 Ohm	1%, 0.25W, MF	
	R....62	57.11.3101	100 Ohm	1%, 0.25W, MF	
	R....63	57.11.3101	100 Ohm	1%, 0.25W, MF	
	R....64	57.11.3181	180 Ohm	1%, 0.25W, MF	
	R....65	57.11.3271	270 Ohm	1%, 0.25W, MF	
	R....66	57.11.3391	390 Ohm	1%, 0.25W, MF	
	R....67	57.11.3331	330 Ohm	1%, 0.25W, MF	
	R....68	57.11.3101	100 Ohm	1%, 0.25W, MF	
	R....69	57.11.3561	560 Ohm	1%, 0.25W, MF	
	R....70	57.11.3471	470 Ohm	1%, 0.25W, MF	
	R....71	57.11.3821	820 Ohm	1%, 0.25W, MF	
	R....72	57.11.3102	1 kOhm	1%, 0.25W, MF	
	R....73	57.11.3681	680 Ohm	1%, 0.25W, MF	
	R....74	57.11.3681	680 Ohm	1%, 0.25W, MF	
	R....75	57.11.3821	820 Ohm	1%, 0.25W, MF	
	R....76	57.11.3821	820 Ohm	1%, 0.25W, MF	
	R....77	57.11.3122	1.2 KOhm	1%, 0.25W, MF	
	R....78	57.11.3102	1 KOhm	1%, 0.25W, MF	
	R....79	57.11.3152	1.5 KOhm	1%, 0.25W, MF	
	R....80	57.11.3122	1.2 KOhm	1%, 0.25W, MF	
	R....81	57.11.3152	1.5 KOhm	1%, 0.25W, MF	
	R....82	57.11.3822	8.2 KOhm	1%, 0.25W, MF	
	R....83	57.11.3181	180 Ohm	1%, 0.25W, MF	
	R....84	57.11.3270	27 Ohm	1%, 0.25W, MF	
	R....85	57.11.3479	4.7 Ohm	1%, 0.25W, MF	
	R....86	57.11.3470	47 Ohm	1%, 0.25W, MF	
	R....87	57.11.3270	27 Ohm	1%, 0.25W, MF	
	R....88	57.11.3270	27 Ohm	1%, 0.25W, MF	
	R....89	57.11.3270	27 Ohm	1%, 0.25W, MF	
	R....90	57.11.3390	39 Ohm	1%, 0.25W, MF	
	R....91	57.11.3471	470 Ohm	1%, 0.25W, MF	
	R....92	57.11.3270	27 Ohm	1%, 0.25W, MF	
	R....93	57.11.3271	270 Ohm	1%, 0.25W, MF	
	R....94	57.11.3101	100 Ohm	1%, 0.25W, MF	
	R....95	57.11.3181	180 Ohm	1%, 0.25W, MF	
	R....96	57.11.3150	15 Ohm	1%, 0.25W, MF	
	R....97	57.11.3101	100 Ohm	1%, 0.25W, MF	
	R....98	57.11.3560	56 Ohm	1%, 0.25W, MF	
	R....99	57.11.3151	150 Ohm	1%, 0.25W, MF	
	R...100	57.11.3102	1 KOhm	1%, 0.25W, MF	
	R...101	57.11.3330	33 Ohm	1%, 0.25W, MF	
	R...102	57.11.3391	390 Ohm	1%, 0.25W, MF	
	R...103	57.11.3560	56 Ohm	1%, 0.25W, MF	
	R...104	57.11.3561	560 Ohm	1%, 0.25W, MF	
	R...105	57.11.3471	470 Ohm	1%, 0.25W, MF	
	R...106	57.11.3222	2.2 KOhm	1%, 0.25W, MF	
	R...107	57.11.3121	120 Ohm	1%, 0.25W, MF	
	R...108	57.11.3103	10 KOhm	1%, 0.25W, MF	

1.775.920.00 DISPLAY UNIT LED ''ESE'' (CONT.)

Ad	..Pos..	...Ref.No...	Description	
	R...109	57.11.3103	10 KOhm	1%, 0.25W, MF
	R...110	57.11.3103	10 KOhm	1%, 0.25W, MF
	R...111	57.11.3103	10 KOhm	1%, 0.25W, MF
	R...112	57.11.3103	10 KOhm	1%, 0.25W, MF
	R...113	57.11.3102	1 KOhm	1%, 0.25W, MF
	R...114	57.11.3104	100 KOhm	1%, 0.25W, MF
	R...115	57.11.3104	100 KOhm	1%, 0.25W, MF
	R...116	57.11.5106	10 MOhm	5%, 0.25W, MF
	R...117	57.11.5106	10 MOhm	5%, 0.25W, MF
	R...118	57.11.3104	100 KOhm	1%, 0.25W, MF
	R...119	57.11.3104	100 KOhm	1%, 0.25W, MF
	R...120	57.11.3473	47 KOhm	1%, 0.25W, MF
	R...121	57.11.3473	47 KOhm	1%, 0.25W, MF
	R...122	57.11.3332	3.3 KOhm	1%, 0.25W, MF
	R...123	57.11.3332	3.3 KOhm	1%, 0.25W, MF
	R...124	57.11.3104	100 KOhm	1%, 0.25W, MF
	R...125	57.11.3104	100 KOhm	1%, 0.25W, MF
	R...126	57.11.3272	2.7 KOhm	1%, 0.25W, MF
	R...127	57.11.3103	10 KOhm	1%, 0.25W, MF
	R...128	57.11.3103	10 KOhm	1%, 0.25W, MF
	R...129	57.11.3272	2.7 KOhm	1%, 0.25W, MF
	R...130	57.11.5155	1.5 MOhm	5%, 0.25W, MF
	R...131	57.11.3103	10 KOhm	1%, 0.25W, MF
	R...132	57.11.3103	10 KOhm	1%, 0.25W, MF
	R...133	57.11.3123	12 KOhm	1%, 0.25W, MF
	R...134	57.11.3103	10 KOhm	1%, 0.25W, MF
	R...135	57.11.3103	10 KOhm	1%, 0.25W, MF
	R...136	57.11.3103	10 KOhm	1%, 0.25W, MF
	R...137	57.11.3103	10 KOhm	1%, 0.25W, MF
	R...138	57.11.3224	220 KOhm	1%, 0.25W, MF
	R...139	57.11.3104	100 KOhm	1%, 0.25W, MF
	R...140	57.11.3473	47 KOhm	1%, 0.25W, MF
	R...141	57.11.5155	1.5 MOhm	5%, 0.25W, MF
	R...142	57.11.3472	4.7 KOhm	1%, 0.25W, MF
	R...143	57.11.3563	56 KOhm	1%, 0.25W, MF
	RA....1	58.01.8502	5 KOhm	-10%, 0.50W, C
	RA....2	58.01.8503	50 KOhm	-10%, 0.50W, C
	RA....3	58.01.8503	50 KOhm	-10%, 0.50W, C
	RA....4	57.92.7012	300mA	PTC
	RA....5	57.92.7012	300mA	PTC
01	RA....6	57.92.7015	1.1 A	PTC

00 KG 91/09/02
01 UL 91/11/04

EL=Electrolytic, C=Ceramic, PETP=Polyester

MF=Metal Film

MANUFACTURER: Mot=Motorola,NS=National Semiconductor
TI=Texas Instruments

END

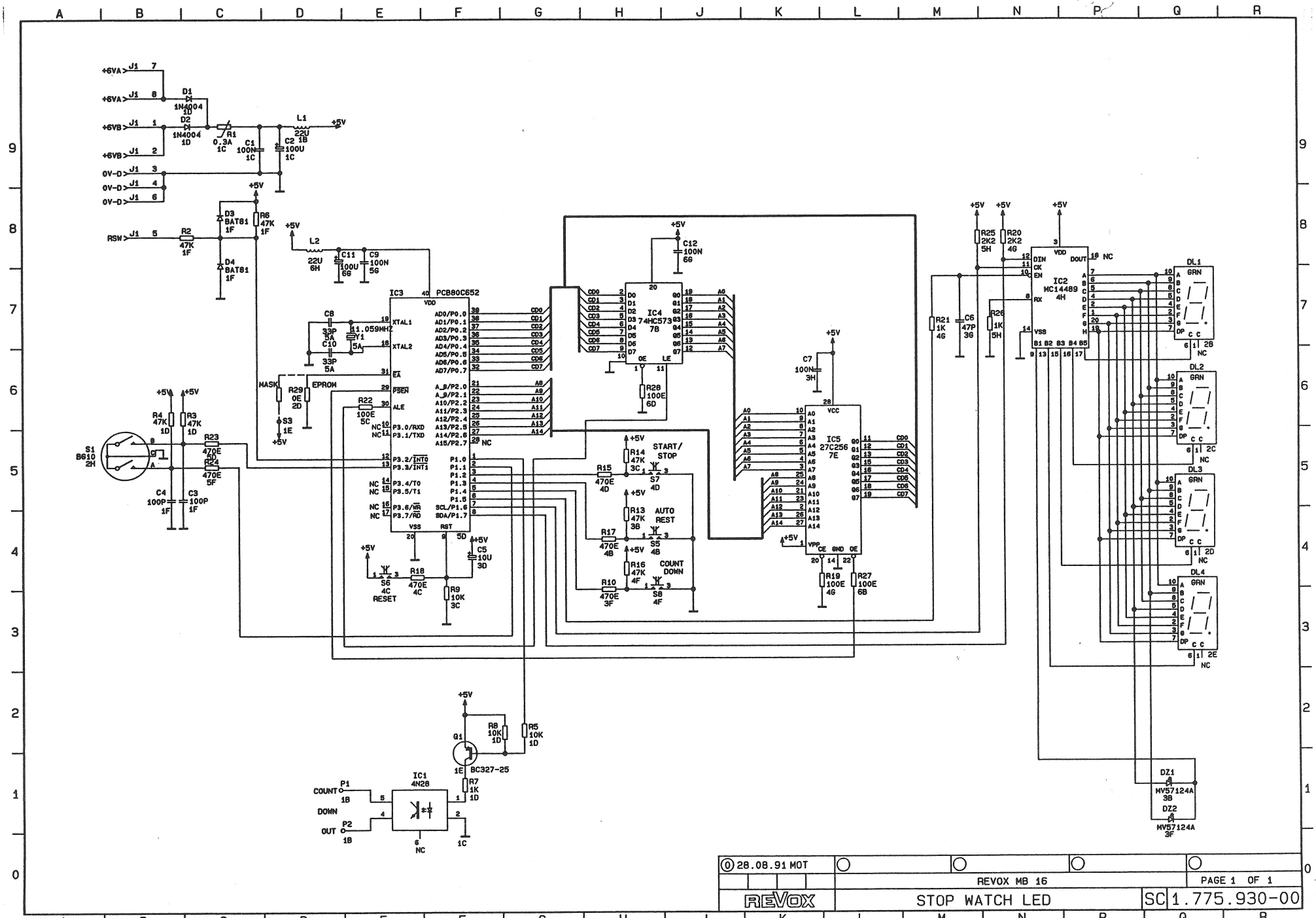

0 28.08.91 MOT				
	REVOX MB 16			PAGE 1 OF 1
REVOX	STOP WATCH LED		SC	1.775.930-00

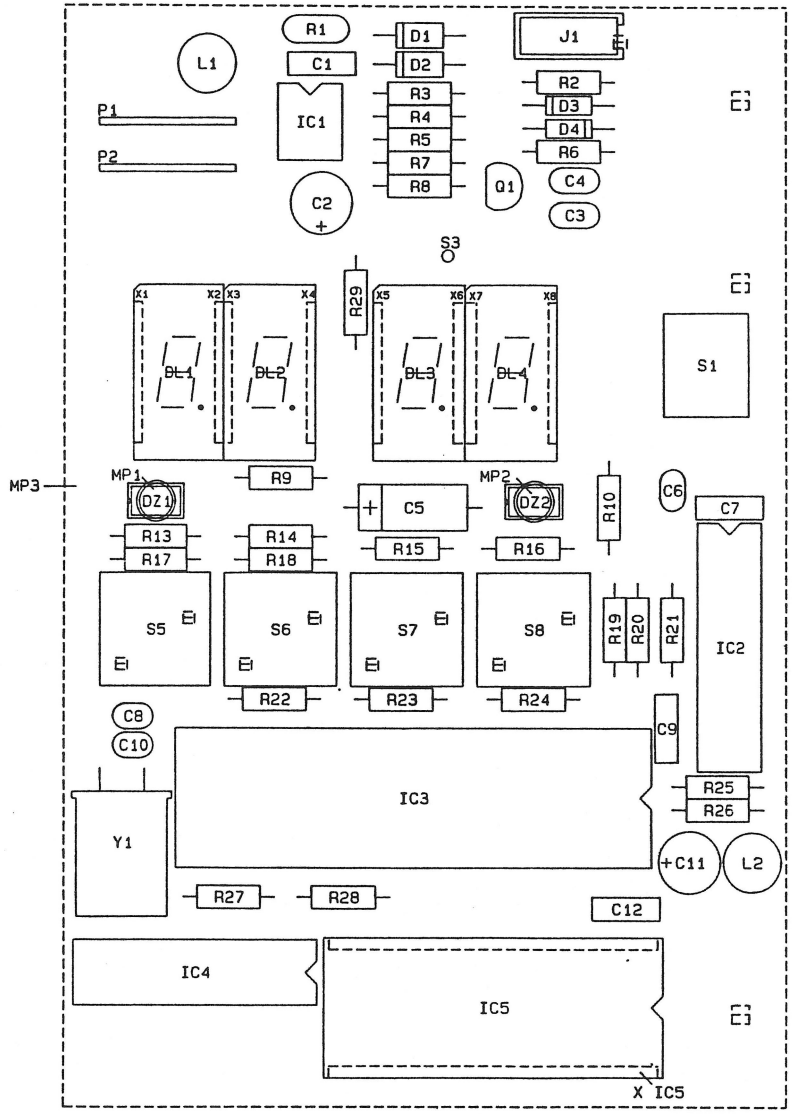

NR.ETIKETTE / ESE-WARNSCHILD

AUFGEKLEBT NACH FABRIKATIONSMUSTER

⓪ 28.08.91 MOT				
	REVOX MB 16			PAGE BP OF
REVOX	STOP WATCH LED		BP	1.775.930-20

1.775.930.20 STOP WATCH LED

Ad	..Pos..	...Ref.No...	Description			
	C.....1	59.06.0104	100n	10 %,	63V	
	C.....2	59.22.3101	100u	-20/+50 %,	10V	
	C.....3	59.34.4101	100p	5 %,	63V,	N750
	C.....4	59.34.4101	100p	5 %,	63V,	N750
	C.....5	59.25.4100	10u	20 %,	25V	
	C.....6	59.34.2470	47p	5 %,	63V,	N150
	C.....7	59.06.0104	100n	10 %,	63V	
	C.....8	59.34.2330	33p	5 %,	63V,	N150
	C.....9	59.06.0104	100n	10 %,	63V	
	C....10	59.34.2330	33p	5 %,	63V,	N150
	C....11	59.22.3101	100u	-20/+50 %,	10V	
	C....12	59.06.0104	100n	10 %,	63V	
	D.....1	50.04.0105	1N4004	D041,RECTIFIER		
	D.....2	50.04.0105	1N4004	D041,RECTIFIER		
	D.....3	50.04.0523	BAT81	D035, SCHOTTKY		
	D.....4	50.04.0523	BAT81	D035, SCHOTTKY		
	DL....1	73.01.0129	7-SEG	GRN, COMMON C		
	DL....2	73.01.0129	7-SEG	GRN, COMMON C		
	DL....3	73.01.0129	7-SEG	GRN, COMMON C		
	DL....4	73.01.0129	7-SEG	GRN, COMMON C		
	DZ....1	50.04.2119	MV57124A	RED DIF,	1.0MCD,LED-CUBE SINGLE	
	DZ....2	50.04.2119	MV57124A	RED DIF,	1.0MCD,LED-CUBE SINGLE	
	IC....1	50.99.0126	4N28	7500V,	DIP06, OPTOCOUPLER	
	IC....2	50.07.0489	MC14489	DIP20, MULTI-CHAR.LED DISP.DRV.		
	IC....3	50.16.0131	PCB80C652	DIP40, SINGLE CHIP 8-BIT MPU		
	IC....4	50.17.1573	74HC573	DIP20, OCTAL D-TYP LATCH		
	IC....5	50.14.2004	27C256	32K * 8 C EPROM (SW 177593120)		
	J.....1	54.14.5508	8-P	VERT,	FEM., J-MICRO-MATCH	
	L.....1	62.02.3220	22u	10 %,1E4 {OHM}, HF-CHOKE		
	L.....2	62.02.3220	22u	10 %,1E4 {OHM}, HF-CHOKE		
	MP....1	50.20.0404		Leading ,D 3.5		
	MP....2	50.20.0404		Leading ,D 3.5		
	MP....3	1.775.930.11		STOP WATCH LED PCB		
01	MP....3	1.775.930.11		STOP WATCH LED PCB Loetstoplack Index 1		
	MP....4	1.101.001.20		Label '' HARDWARE -20 ''		
	P.....1	54.02.0328	1-P	ANG.,	MALE, FLATPIN 2.8*0.8	
	P.....2	54.02.0328	1-P	ANG.,	MALE, FLATPIN 2.8*0.8	
	Q.....1	50.03.0351	BC327-25	PNP,	TO92-1	
	R.....1	57.92.7012	0.3A	60V,	R-PTC	
	R.....2	57.11.3473	47k	1 %,	0.6W,	MF
	R.....3	57.11.3473	47k	1 %,	0.6W,	MF
	R.....4	57.11.3473	47k	1 %,	0.6W,	MF
	R.....5	57.11.3103	10k	1 %,	0.6W,	MF
	R.....6	57.11.3473	47k	1 %,	0.6W,	MF
	R.....7	57.11.3102	1k	1 %,	0.6W,	MF
	R.....8	57.11.3103	10k	1 %,	0.6W,	MF
	R.....9	57.11.3103	10k	1 %,	0.6W,	MF
	R....10	57.11.3471	470E	1 %,	0.6W,	MF
	R....13	57.11.3473	47k	1 %,	0.6W,	MF
	R....14	57.11.3473	47k	1 %,	0.6W,	MF
	R....15	57.11.3471	470E	1 %,	0.6W,	MF
	R....16	57.11.3473	47k	1 %,	0.6W,	MF
	R....17	57.11.3471	470E	1 %,	0.6W,	MF
	R....18	57.11.3471	470E	1 %,	0.6W,	MF
	R....19	57.11.3101	100E	1 %,	0.6W,	MF
	R....20	57.11.3222	2k2	1 %,	0.6W,	MF
	R....21	57.11.3102	1k	1 %,	0.6W,	MF
	R....22	57.11.3101	100E	1 %,	0.6W,	MF
	R....23	57.11.3471	470E	1 %,	0.6W,	MF
	R....24	57.11.3471	470E	1 %,	0.6W,	MF
	R....25	57.11.3222	2k2	1 %,	0.6W,	MF
	R....26	57.11.3102	1k	1 %,	0.6W,	MF
	R....27	57.11.3101	100E	1 %,	0.6W,	MF
	R....28	57.11.3101	100E	1 %,	0.6W,	MF
	R....29	57.11.3000	0E	1 %, MF	0-OHM RES	
	S.....1	1.775.930.03	BG10	BG10, SWITCH BIT GENERATOR		
	S.....5	55.99.0158	1*a	TO5, PUSHBUTTON SWITCH		
	S.....6	55.99.0158	1*a	TO5, PUSHBUTTON SWITCH		
	S.....7	55.99.0158	1*a	TO5, PUSHBUTTON SWITCH		
	S.....8	55.99.0158	1*a	TO5, PUSHBUTTON SWITCH		
	X.....1	53.03.0218	5 pcs	Socket		
	X.....2	53.03.0218	5 pcs	Socket		
	X.....3	53.03.0218	5 pcs	Socket		
	X.....4	53.03.0218	5 pcs	Socket		
	X.....5	53.03.0218	5 pcs	Socket		
	X.....6	53.03.0218	5 pcs	Socket		
	X.....7	53.03.0218	5 pcs	Socket		
	X.....8	53.03.0218	5 pcs	Socket		
	XIC...5	53.03.0173		IC-Socket 28 p		
	Y.....1	89.01.1004	11.059MHZ	PAR., HC18/43/49/U	VERT.	

00 KG 91/08/28
01 UL 91/11/04

EL=Electrolytic,C=Ceramic, PETP=Polyester

MF=Metal Film

MANUFACTURER: dbx=dbx Incorparated,NS=National Semiconductor,Mot=Motorola
RA=Raytheon,SIG=Signetics,TI=Texas Instruments

END

REVOX®

Argentina: Buenos Aires, Tel. (1) 311 25 74 • **Australia:** Chatswood, Tel. (02) 417 4700 • **Austria:** Wien, Tel. (01) 47 34 65 • **Belgien/Luxemburg:** Houthalen/B, Tel. (011) 52 58 58 • **Brazil:** Rio de Janeiro (Pro), Tel. (021) 622 2844 • **Canada:** Toronto, Tel. (416) 510 1347 • **Chile:** Santiago, Tel. 246 23 33 • **Denmark:** Rödovre, Tel. 36 72 11 12 • **Finland:** Helsinki, Tel. (0) 755 7711 • **France:** Paris, Tel. 47 23 55 88 **Germany:** Löffingen, Tel. (07654) 8030 • **Greece:** Athens, Tel. (01) 603 667 • **Holland:** Heijen, Tel. (08851) 96 260 • **Hong Kong / Philippines:** Hong Kong, Tel. 898 93 66 • **India:** Bombay, Tel. 636 1226 **Italy:** Settimo Milanese, Tel. (02) 33 50 08 10 • **Japan:** Tokyo (Pro), Tel. (03) 3165 22 11 • **Mexico:** Mexico, Tel. 559 76 77 • **Norway:** Oslo, Tel. (02) 289 490 **Poland:** Gdansk, Tel. (058) 47 94 00 • **Portugal:** Oeiras, Tel. (1) 443 59 30 • **Singapore / Malaysia / Indonesia:** Singapore, Tel. 250 72 22 • **Spain:** Madrid, Tel. 519 24 16 Las Palmas de Gran Canaria, Tel. (28) 37 11 39 **Sweden:** Solna, Tel. (08) 730 02 80 • **United Kingdom:** Thatcham, Tel. (0635) 876969 • **USA:** Nashville, Tel. (615) 254 56 51 • **Venezuela:** Caracas, Tel. 985 40 03 • **Head office:** REVOX, Althardstrasse 146, CH - 8105 Regensdorf, Tel. (01) 870 77 11.

® REVOX is a registered trade mark of STUDER REVOX AG Regensdorf. Copyright by STUDER REVOX AG, CH - 8105 Regensdorf / Zurich. Printed in Switzerland, 10.30.1900 (Ed 03/92)